Installation

Duct Installation Instructions

Bonding ATS Duct™ Systems
with ChemBond™ Resin

Shipping, Handling and Storage Guide

Shipping
Prior to shipping the duct, ATS cleans the interior and exterior of the duct. The duct is wrapped and/or padded to protect it during shipping where appropriate.

Receiving
Regardless of the mode of transportation used, certain procedures should be followed upon receipt of the materials. It is important to verify the condition of each piece as it is unloaded. The pieces should be checked against the Bill of Lading.

Inspection
Inspect the shipment upon delivery. Examine materials to see if the load has shifted or shows signs of unusually rough handling. A shifted load or other signs of rough treatment is cause for careful inspection of each piece. Note damaged or missing items on the Bill of Lading and notify the carrier's agent (truck driver). Get a signed acknowledgement of the of the damage or shortage at the time of unloading. Do not dispose of damaged pieces; hold them until notified by the carrier of the procedure to be followed for replacement. Do not return damaged items to ATS until requested to do so by an ATS employee. Replacement materials must be reordered on a separate purchase order number. It is up to the receiving party to collect monies due for missing or damaged pieces from the carrier. However, ATS will do everything it can to facilitate resolution of shipping problems. Shipments are Free On Board (FOB) factory, unless arranged with ATS before shipment. Once materials are loaded and leave ATS' plant, title to the materials passes to the consignee, the customer.

Unloading
Small parts may be unloaded by hand. They should not be thrown off the truck. Handle parts carefully, being sure not to scratch the interior surface or damage the ends. Do not push ductwork off the truck with a forklift. Do not use wire rope or chains as a sling to lift large duct. **Do not use hooks to lift duct.** If slings are to be used, they must be a minimum of 4" wide webbed nylon. On 20 foot lengths of large duct, two slings should be placed approximately 7 feet in from each end, and the load lifted evenly.

Storage
Materials should not be stored in an area where they will have to be relocated frequently or become damaged because of interference with traffic or other trades. It is particularly important that the resin and glass materials be stored out of the weather in a cool, dry place. If they must be stored outside, cover all product with a protective tarp. The glass materials, in particular, should be covered to protect them from rain and snow. If a drum of resin is received, store it on its side. Keep resin out of the sun and store in an area where the temperature will not fall below 40°F. **(Never allow resin, hardener or any additives to freeze). (See *Shelf Life* on page 293.)**

Safety, Health & Environmental
Read the labels on the resin containers carefully. They contain information about safety and health considerations, storage, and environmental impact. MSDS sheets can be found in several languages on ATS' website at www.atsduct.com.

Bonding ATS Duct™ Systems with ChemBond™ Resin

This guide is intended to aid you in the proper handling of our duct at the job site and to assist you in making fiberglass joints.

Although this Installation Guide contains specific information, this information is not to be considered as the only criteria for correct ductwork installation. The Owner, Engineer, and/or Installer is responsible for establishing procedures for satisfactory duct system design, installation and performance. Some items which are specifically addressed in this guide, and are extremely important, are duct supports and coating of ductwork installed outside of the building. These issues need to be considered prior to the actual installation of the ductwork. Note for example, the vacuum load of large diameter duct can be increased by over 3 times by supporting the duct correctly.

One ATS Duct™ System is the ATS 4910CR™ ductwork and ChemBond™ Joint using ChemBond™ Resin, putty and the ATS H-Collar™ and/or the ATS Internal Beaded Slip Collar™. When properly installed, this system provides excellent chemical and fire resistance.

ChemBond™ is a unique resin system that can be used to join ATS Duct™ Systems without the need to pre-sand the duct end surfaces. When using the ATS 4910CR™ duct system, only ChemBond™ Resin should be used for bonding. The excellent chemical resistance and superior adhesion characteristics of the ChemBond™ Resin makes for a simple and practically fool–proof joint.

Recommended Work Procedures for the use of ChemBond™

Care should be taken to avoid any skin and eye contact with ChemBond™. These procedures are designed to help prevent skin and eye contact.

Note: All personal protective equipment (PPE) must be donned before handling ChemBond™.

Donning Procedures

1. Chemical resistant long sleeve coveralls should be donned. Examples of acceptable coveralls are TYVEK®/Saranex 23-P, ChemTuff®, or equivalent.

   Note: When heavy usage of ChemBond™ is anticipated, don a nitrile apron over the coveralls to prevent soiling of the coveralls.

2. Don chemical resistant footwear. Chemical resistant over boots may be worn over personal footwear if desired. All outer footwear should be solvent resistant and have a surface which can be easily cleaned. Open shoes and footwear constructed of porous substances such as canvas and leather are not acceptable when using the raw chemicals.

3. An inner layer of gloves should be donned and the sleeve of the coverall taped over the edge of the gloves, leaving approximately 2 inches of the glove showing past the wrist. Thin latex and cotton gloves are not acceptable as inner gloves. Inner gloves should be disposable nitrile gloves or equivalent. Examples of acceptable gloves are BEST® 100% Nitrile, Best Manufacturing Company, Menlo, GA 30731, 1-800-241-0323.

   Note: Individuals with a history of dermatitis may apply a layer of an appropriate barrier cream to their hands prior to donning the inner gloves. See part type #583 in the Mechanical Drawing Guide.

4. Heavy outer elbow length gloves should be placed over the nitrile gloves. Outer gloves should be Silvershield®, Viton®, or equivalent.

5. Chemical-splash goggles or face shield should be donned prior to commencing work with ChemBond™.

   Note: The outer gloves may be removed by using the doffing procedures, as needed. The inner gloves should be changed if they become soiled or torn. The coveralls should be replaced if they become heavily soiled or torn. Use the doffing procedures to remove PPE prior to breaks, lunch and after completion of work for the day.

Doffing Procedures (Removal of Personal Protective Equipment)

Care must be taken during PPE removal procedures so that inner clothing and gloves are not soiled by residue on the outer gloves and coveralls.

1. Wipe visible residue from the outer gloves, apron and footwear using solvent on a rag. Dispose of the rag as solvent waste.

   Note: Step 1 should only be performed with adequate ventilation, and using a lower toxicity solvent such as acetone. Use the minimum amount of solvent necessary.

   Important: Do not use solvent to remove ChemBond™ from the skin. This may lead to dermatitis from exposure to the solvent. Use mild soap and water to remove ChemBond™ from the skin.

2. Remove the apron and outer footwear and place in an appropriate storage container.

3. Remove the outer gloves by using one hand to loosen the glove on the other hand, and repeat the process with the opposite hand until both gloves are loose enough to fall from the hand. Do not remove the outer glove from one hand and then use the inner glove to remove the outer glove on the opposite hand. This will soil the inner glove.

4. Remove the tape from the sleeve of the coverall over the inner glove. Remove the coveralls, rolling them in on themselves so that any resin will be on the inside. Dispose of the coveralls in an appropriate container.

5. Remove the inner gloves and dispose of in an appropriate container.

6. Remove any personal clothing such us shoes or hats which are soiled with ChemBond™ and leave at the work site. Soiled clothing should not be taken home. It should be cleaned or disposed of at the work site.

7. If there is any question at all as to procedure, contact the ATS technical staff at (510)234-3173.

Special Procedures Guideline When Using ChemBond™ Resin

The guidelines below are important to follow when using ChemBond™ Resin.

General Precautions

ChemBond™ resin can cause irritation; wear protective skin and eye equipment. Do not heat in bulk: decomposition may occur, releasing fumes.

Specific Personal Protective Equipment

For Inhalation:	Respirators are not needed unless the resin is smoking (if incorrectly catalyzed in bulk) or being atomized during spray application. If the resin is smoking or being atomized, an organic chemical cartridge respirator is needed in non-vented areas.
For Eyes:	Splash-proof chemical goggles
For Skin:	Elbow-length rubber gloves. Shorter latex gloves are not recommended. The use of Blocking Cream (ATS Part type #583) is highly recommended. The Blocking Cream is applied prior to working with the resin and helps prevent allergic reactions.
Other:	(1) Appropriate equipment to prevent probability of skin and eye contact (such as Tyvek suits or over alls).
	(2) Good general mechanical ventilation and local exhaust.

Special Note

Proper protective clothing should be used during the mixing and installation of ChemBond™ resin. No one should be allowed inside the immediate work area without proper protective clothing. Please review the donning procedures for ChemBond™ resin use to determine the required protective equipment.

Procedures for removing ChemBond™ resin when spilled on protective clothing:

- Rinse excess resin from protective clothing using water. A wet rag may be used as necessary to remove residual resin.
- Use the doffing procedures to remove protective clothing and dispose of properly. Don new protective clothing prior to resuming work with ChemBond™ resin.

If proper work procedures are followed no worker will be using ChemBond™ resin without proper protective clothing. The following procedures are presented in the unlikely event that ChemBond™ resin is spilled on someone not wearing protective clothing.

Procedures for removing ChemBond™ resin spilled on skin or regular clothing:

Warning: Flush eyes with water immediately if resin comes into contact with the eyes. Continue flushing the eyes for at least fifteen (15) minutes with copious amounts of water. Consult a physician as soon as possible.

- Remove soiled clothing immediately.
- Wash exposed skin and hair with mild soap and water to remove any resin residue.
- Dispose of clothing properly. Do not reuse soiled clothing.
- Consult a physician should a rash develop on exposed skin.

Notes:

NEW MIXING INSTRUCTIONS, 2003

The ChemBond™ Joining System

The ATS ChemBond™ Joining System uses ChemBond™ Resin with Standard Hardener for the exterior of the joints (only necessary if not using H-Collar™ Joint) and ChemBond™ pre-mixed Putty with Putty Hardener for the interior of the joints. Putty now comes pre-mixed for the customer's convenience. (Alternatively, the contractor can use ChemBond™ Resin and putty filler and mix it themselves, for a slightly reduced cost.)

ChemBond™ Resin – For exterior of Slip Collar™ Joints

The ChemBond™ Resin is used to bond the exterior of the joints. It is catalyzed using Standard hardener. This section address the use of ChemBond™ Resin with Standard Hardener. The resin is not used when making H-Collar™ Joints. (See putty.)

The ratio of the ChemBond™ Standard Hardener is 25% by weight (for 100 grams of ChemBond™ Resin use 25 grams of ChemBond™ Standard Hardener). Proper ratios of resin and hardener and thorough mixing of the resin are crucial to proper cure, chemical resistance and strength of the joint. Do not "Eyeball" quantities. Be sure to mix until resin and hardener are mixed together uniformly and then continue to mix for 2-3 minutes more. Refer to the "ChemBond™ Resin Chart" below for common size batches.

DO NOT ALTER THE RESIN RATIO!
25% BY WEIGHT STANDARD HARDENER TO RESIN!

The curing cycle can only be accelerated by applying heat to the surface of the lay-up. A hot air gun works well to expedite the cure. If the resin is not curing at a satisfactory rate, please contact ATS' Engineering & Sales office at (510) 234-3173. Accelerators can be obtained from ATS.

The specific gravity of the ChemBond™ Standard Hardener is approximately 5% greater than water, therefore 'cc' units of measure can be substituted at a value equal to approximately 95% of gram weight; i.e. 25 grams of Standard Hardener is equal to 23.7 cc. Syringes (ATS part types #603 & #604) and 'cc' cups can be used to measure the proper amount of hardener.

ChemBond™ **Resin** Mixing Charts

1 gallon container of ChemBond™ resin = net 10 lbs (4.5 kg)
1 liter container of ChemBond™ Standard Hardener = net 2.3 lbs (1.04 kg)

(Note: Do not confuse "1 gallon container" with "1 fluid gallon." The gallon container only holds 10 pounds of resin/putty. It is not one full fluid gallon.)

Weight Ratios for use with Scales				
Resin		Standard hardener		
lbs	kg	Ounces	Grams	cc
1	0.45	4	113	107
2	0.91	8	227	214
3	1.36	12	340	321
4	1.82	16	454	429
5	2.27	20	567	536

Volumetric Ratios For use with containers		
Resin		Standard Hardener
Fluid Ounces	ml	cc
8	237	90
16	473	179
24	710	269
32	946	359
40	1183	448

ChemBond™ Putty – For H-Collars™ and the interior of Slip Collar™ Joints

The ChemBond™ Putty is used to bond the interior of the joints. It is catalyzed using the Putty Hardener. The Putty Hardener provides extra chemical resistance for the duct interior. When making H-Collar™ joints, putty is the only material you will need.

The ratio of ChemBond™ Putty Hardener is 12.5% by weight. (For 100 grams of ChemBond™ Putty, use 12.5 grams ChemBond™ Putty Hardener.) **It is extremely important to blend the putty hardener into the putty for a minimum of 2 to 3 minutes making sure to scrape the bottom and sides of the container to blend the hardener into all of the putty. Do not "eyeball" quantities.**

DO NOT ALTER THE PUTTY TO PUTTY HARDENER RATIO!
12.5% BY WEIGHT PUTTY HARDENER TO PUTTY!

ChemBond™ Putty is used to bond the beaded slip collars (or H-Collar™) into the duct to seal the joint against chemical attack. Un-catalyzed ChemBond™ Putty is provided from the factory pre-mixed in 1 gallon containers. The pre-mixed putty consists of fiber filler mixed into the ChemBond™ Resin to a peanut–butter consistency most desirable for use. A small amount of fiber filler is provided as needed, in the event extra-thick putty is necessary.

ChemBond™ Putty Mixing Charts

1 gallon container od ChemBond™ Putty = net 10 lbs (4.5 kg)
1 quart container of ChemBond Putty Hardener = net 1.3 lbs (0.59 kg)

(Note: Do not confuse "1 gallon container" with "1 fluid gallon" (or "1 quart container" with "1 fluid quart"). The gallon container only holds 10 pounds of resin/putty. It is not one full fluid gallon. (The quart container only holds 1.3 pounds of hardener. It is not one full fluid quart.))

Weight Ratios for use with Scales				
Putty		Putty hardener		
lbs	kg	Ounces	Grams	cc
1	0.45	2	57	53
2	0.91	4	113	106
3	1.36	6	170	159
4	1.82	8	227	212
5	2.27	10	284	265

Volumetric Ratios For use with containers		
Putty		Putty Hardener
Fluid Ounces	ml	cc
8	237	46
16	473	93
24	710	139
32	946	186
40	1183	232

Installation Instructions – Mixing Instructions, ChemBond™ Putty

Circumferential Joint Bond Using ATS H-Collar™

The ATS H-Collar is used to make circumferential bonds of ATS duct sections. There is no need to do exterior wraps. The H-Collar consists of an internal slip collar (for insuring corrosion resistance across the joint), a reservoir channel (for sealing the duct end into the collar) and an external structural collar (for tensile and flexural joint strength). See H-Collar Cross Section below. ChemBond Putty Mix is used to cement the duct ends into the H-Collar. Each H-Collar is provided with 3 set screws on each side to hold collar tightly in position while putty cures.

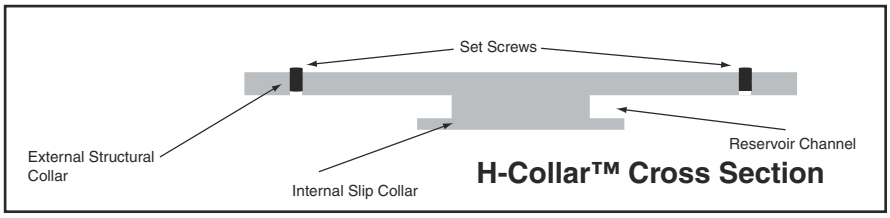

H-Collar™ Cross Section

ASSEMBLY

Begin by mixing the desired amount of ChemBond Putty for the diameter of joint(s) to be connected. Refer to "ChemBond Putty Mixing Instructions" on page 141 and "ChemBond Joint Chart" on page 152 for Putty/Putty Hardener ratios. A common mix is 46 cc of Putty Hardener to 1 cup (8 fl. Oz.) of ChemBond Putty.

1) Using a tongue depressor or squeegee, apply Putty Mix onto the internal surface of one side of the structural collar, spreading the Putty Mix into the reservoir channel. The Putty Mix should be spread evenly onto the entire inner collar surface about 1/16" thick. Next, apply Putty Mix to the external surface of the duct end, covering entire duct end with an even 1/8" thick coat of Putty Mix for a distance equal to the depth of the collar. Butter the end of the duct with Putty Mix to seal the end, as described on page 154.
2) Slowly, insert the prepared duct end into the prepared end of the H-Collar. The connection should be made with the duct end evenly positioned in the collar opening as it is inserted. Slide the duct completely into the collar, until the duct end slips over the internal slip collar and completely into the collar channel. Tighten set screws to hold duct in place while Putty Mix hardens. Set screws are allen head type. Wrenches provided if requested.
3) Squeegee the excess Putty Mix evenly to form a smooth, beveled putty transition between the external surface of the collar and the duct. Where possible, smooth the putty evenly on the inside, along the connection between the internal slip collar and the duct liner.

For best results, the duct should be held while the Putty Mix cures, by tightening set screws provided. DO NOT TIGHTEN SET SCREWS TOO MUCH. DON'T INCREASE THE NATURAL GAP BETWEEN THE H-COLLAR AND THE DUCT.

Immediate cure can be achieved by wrapping a drum heater, with a temperature regulator set at 180°F, around the center of the H-Collar and apply heat for approximately 5 minutes. Remove the heater. The Putty Mix will harden approximately 5 minutes after the heat wrap is removed. Alternatively, a hot air gun can be used to warm the joint and accelerate the cure.

Installation Instructions – ATS H-Collar™

Circumferential Joint Bond
Using ATS Internal Beaded Slip Collar™

When bonding ATS Duct™ sections together, an "internal bond" and an "external bond" must be done unless using ATS' new H-Collar Joining System™ (See page 21 and page 142 opposite). The "internal bond" consists of an internal beaded slip collar which is puttied into the adjoining duct sections to seal the joint from chemical attack from the inside. The "external bond" consists of glass layers wetted out with ChemBond™ resin. For large diameter ducts (36" and over), it is possible to do the joint without the internal beaded slip collar. (Alternatively, the H-Collar can be used.) However, the joint needs to be sealed from the inside using ChemBond™ putty covered with a layer of synthetic veil and ChemBond™ Resin to protect the joint against chemical attack.

Internal Bond

Internal Beaded Slip Collar Assembly:

Begin the bonding process by mixing the desired amount of ChemBond™ Putty with Putty Hardener for the size joint(s) to be bonded. Be sure to use appropriate safety precautions when using the resin. Blocking Cream is recommended along with the use of elbow-length gloves. The Blocking Cream acts as a protective layer of skin.

Transfer the desired amount of ChemBond™ Putty into a small container and add the appropriate amount of Putty Hardener at 12.5% of the weight of the Putty. See the Putty Mixing Chart under Mixing Instructions, page 141, for weight and volumetric ratios. Blend the mixture thoroughly for a minimum of 2-3 minutes–until the putty mixture is smooth and even.

The pot life of the putty is approximately 45 minutes when kept in a shallow pan and only 30 minutes if kept in a bucket. (See page 153 for effects of temperature.) If the resin is mixed in a narrow cylinder, the mixture may overheat. Transfer the batch to a low, flat container to avoid problems and prolong resin usage.

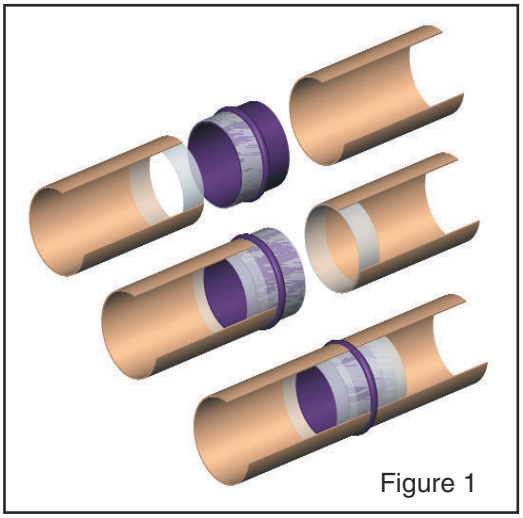

Figure 1

The first step is to apply a thin layer of Putty Mix to the inside surface of each of the ducts to be joined (to the depth of the beaded slip collar). Apply a liberal coat of Putty Mix to one side (and edge) of the outside surface of the beaded slip collar and insert the coated end into the duct/fitting end. Bevel the edge of the putty to form a chemical resistant seal. Apply Putty Mix over the remaining outer surface area of the beaded slip collar and slide the adjoining duct/fitting over the collar until the end hits the bead of the beaded slip collar. If the system is to be used within 7 days or if you wish to advance the curing of the joint, apply heat with a hot air gun for 20 minutes. Do not use screws to hold the duct/collar assembly in place. They can cause leaks. Clear plastic pallet wrap/tape works well to hold the parts temporarily until the beaded slip collar/duct assembly cures. Wrap the pallet wrap tightly around the duct and it sticks to itself.

Installation Instructions – Circumferential Joints, Internal Bond

Internal Bond

Alternative for large diameter duct

On duct sizes 48" Ø (1200mm) or greater, contractors experience difficulties in joining ducts because of the added bulk and weight of larger sizes. We recommend one of the following alternative methods that will increase installation efficiency without compromising the corrosion resistance in those instances where the Slip Collar is eliminated.

Method #1: To align duct, obtain (from your sheet metal shop) metal sleeves 30cm (12") wide. (See Figure 2.) Ideally, the sleeves should be 12 to 18 gauge rolled in two half-sections and flanged when more than a few joints will be made.

The sleeves wrap around the duct joint and tighten snugly with welders clasps. Single piece band sleeves can also be used when only a few joints will be made for a specific diameter. The single piece sleeves should be made a few inches longer than the duct circumference and tightened with draw bands. Each sleeve should have 4" (100mm) square cutouts located every 8" (200mm) on center along the sleeve centerline as shown in Figure 2. Also obtain 1" x 3" (25mm x 75mm) 18 gauge stainless steel clips with 3/16" (5mm) holes pre-drilled 1/2" (13mm) in from each end and 3/16" (5mm) stainless steel rivets not to exceed 3/8" (10mm) long when installed.

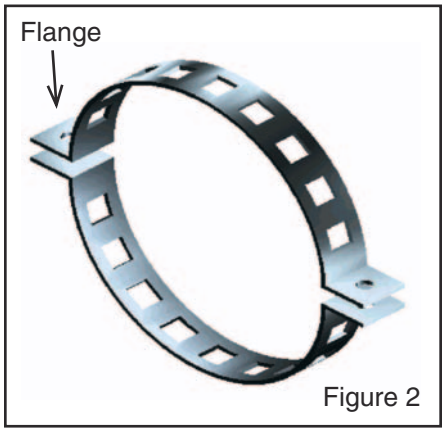

Figure 2

Without attaching the slip collar, butt the two ends of the ducts to be bonded together and wrap the 12" (30cm) wide metal sleeve around the joint. Locate the seam of the joint in the center of the 4" (100mm) wide cutouts using clamps or draw bands (or similar means) and tighten the sleeve securely against the seam to temporarily align and hold the sections in position.

Place the stainless steel 1" x 3" (25mm x 75mm) clip evenly across the joint in the center of each 4" (100mm) cutout. Drill pilot holes in the FRP duct and attach the stainless steel clip with stainless steel rivet. When all of the clips are installed, the band may be removed.

Method #2: Instead of a typical straight duct, a bell and spigot end design can be used. (A bell and spigot end would need to be special ordered.) The two adjoining duct sections are slid together. Sheet metal screws can be used to hold the duct together while doing an internal & external (detailed in the next section) joint. From the inside, the sheet metal screws need to be cut off and then sealed with ChemBond™ Putty.

Both Methods: The inside of the joint needs to be sealed by having someone go inside the duct and putty the joint seam. Refer to the ChemBond™ Resin per joint Chart on page 152 for the corresponding amount of putty to be used to seal the inside of the joint. It is very important that the seam between the ducts and the stainless steel rivet holes are liberally covered with ChemBond™ Putty. Once the inside of the joint has been sealed you can proceed with the standard installation instructions for the exterior.

External Bond

Putty the exterior joint seam for optimal chemical resistance: Apply ChemBond™ putty mixture into the seam of the joint to create an even surface with the outer duct wall surfaces of the adjoining pieces. This putty application seals the ends of the duct/fittings for a complete chemical resistant barrier.

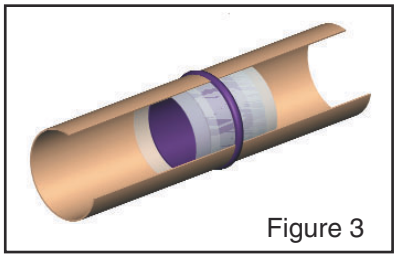

Figure 3

External Bond

Outside Glass & Resin Lay-Up Bond:

Use only boat cloth (fine mesh) for glass reinforcement. The "ChemBond™ Joint Chart" on page 152 lists our recommended glass widths and number of layers. Using a three inch paint roller with 1/8" (3mm) nap, wet out the outer surfaces of the adjoining pieces of duct with the ChemBond™ Resin. This layer should be resin rich, but not so rich as to cause excessive runs and drips. Because of the resin's high viscosity, a liberal amount of resin can be applied easily.

Note: It is imperative that the duct be free from oils, dust and moisture to insure good adhesion. In places where the differential between day and night temperatures is great, condensation may affect the viability of an unsanded joint. While ATS joints normally do not need to be sanded, if there is any doubt as to the joint being clean and dry throughout the curing time, a light hand sanding is recommended.

Apply one layer of (dry) boat cloth around the wet out joint, pulling the cloth into the joint. Using a squeegee (—a squeegee is preferable to a paint roller, although a paint roller can be used—a squeegee is faster, cheaper and it can be cleaned—), wet out the outer surface of the boat cloth smoothing the joint to achieve a resin rich, uniform surface. *Refer to the Resin per Joint Chart on page 152 for the sequence, width and total number of glass layers to be applied per joint using the method previously described.*

External Bond

Large Diameter Ducts

Another method that greatly reduces the labor charge on large diameter joints is to cut the glass boat cloth in lengths that are a few inches over 1/2 the joint circumference. Wet out the center strip of the smooth waxy side of a butcher paper with ChemBond™ Resin mix, slightly wider than the width of the glass. Place one of the pre-cut lengths of boat cloth over the wet out area and wet this layer with ChemBond™ Resin mix. Use a squeegee to evenly saturate the boat cloth. Apply the second layer of cloth over the first layer and wet out with resin as done on the first layer. Proceed with each layer of cloth until the final layer is saturated. Fold the ends of the butcher paper over the ends of the prepared layup and pick up the butcher paper layup by the ends. Place one end on the top of the duct joint with the prepared boat cloth centered over the joint seam. Apply the layup to the joint down the side, pressing against the butcher paper and forcing the layup into the joint as you move down and around the bottom end. Remove the butcher paper and smooth the layup into position with a squeegee, working from the center to the top and the bottom of the duct. Repeat the process for the opposite side of the joint, making sure to overlap the layup on the top and bottom to make the layup complete.

Branch Taps

Pre-configured Taps (45° & 90° Taps)

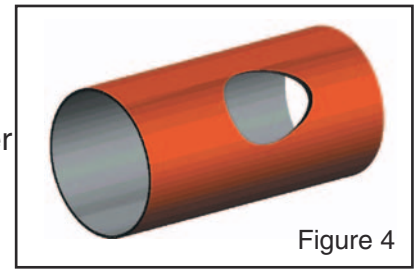
Figure 4

Place pre-configured tap against main duct at the exact location where it will be installed. Using a marker (wax pencil or china marker) inscribe the inner and outer diameter of the tap on the main.

Using a jigsaw with a carborundum blade, cut the hole for the tap. Cut between the lines drawn on the duct; this creates a good seat for the tap to sit on without falling into the duct. Place the tap on the main and hot tab in place using ATS Heat Shrink Tabs. (See ATS Part Type #550 in the Mechanical Drawing Guide.)

Mix a batch of ChemBond™ putty to seal the seam between the main and the tap. By hand, smooth the putty on the exterior to create a beveled surface. For diameters greater than 12" (300mm) an inside veil layup is recommended. Veil should be applied over the inside seam saturated with ChemBond™ **Resin** that has been catalyzed with ChemBond™ **Putty Hardener** at a ratio of 14.5% hardener by weight. For diameters 2" to 12" ChemBond™ Putty can be applied to the inside and smoothed by hand to seal the inside seam. (Note– For this procedure use the normal mixing ratio of 12.5% putty hardener to weight of putty.) Now a glass and resin joint can be done on the exterior. Sanding is required for diameters greater than 350mm (14") diameter to ensure good adhesion. Wet out the outer surface of the lay up with ChemBond™ resin and apply boat cloth around the joint, beginning with one layer of 4" wide boat cloth followed by one layer of 6" boat cloth. Depending on the diameter of the tap, additional layers may be required as described in the chart below. (See ATS Part Type #535 to #539 [Boat Cloth] in the Mechanical Drawing Guide.)

Branch Taps Glass Chart

Nom. Diam. (in)	Nom. Diam. (mm)	# of Layers Wetted with ChemBond Resin				
		Inside (Veil)	Outside Glass Layups (Boat Cloth)			
			4"	6"	8"	12"
2" - 12"	50 - 300	0	1	1		
14" - 24"	350 - 600	1	1	1	1	
26" - 40"	650 - 1000	1	1	1	1	
42" - 60"	1050 - 1500	2	1	1	1	1
over 60"	>1500	2	1	1	1	1

Installation Instructions – Bonding Preconfigured Taps

ATS Saddle Taps
45° & 90° Taps onto Non-Operating Systems
See ATS Part Types 39 & 49

Place saddle tap against main duct at the exact location where it will be installed. Mark the centerline of the tap on the duct for alignment. Using a marker (wax pencil or china marker) inscribe the inside diameter and outside of the saddle flange.

Using a jigsaw with a carborundum blade, cut approximately 6mm (1/4") outside of the tap diameter line drawn on the duct. This creates a hole for the tap which is slightly larger than the interior of the tap allowing a lip for the ChemBond™ putty to fill, sealing the cut edge of the main duct. ATS Saddle Taps come pre-sanded on the interior from the factory.

Apply ChemBond™ putty to the underside of the saddle. The putty should be about 3mm (1/8") thick. The tap is then placed on the main duct using the saddle centerline marks drawn previously. Stainless steel hose clamps should be used to secure the tap to the main until the putty has cured. As the hose clamps are lightly tightened, putty will ooze out from under the saddle on the inside. On 3" diameter (75mm diameter) and greater, the inside of the joint can be beveled by hand. By hand, reaching inside the tap, smooth the putty on the interior to create a beveled surface.

The stainless steel hose clamps should be left on the duct for shear strength while the ChemBond™ putty is curing. **Note: Hose clamps are not supplied by ATS.*

If stainless steel hose clamps are left on, no further work needs to be done. However, if it is desirable to remove the hose clamps, an additional outside layup is recommended if the duct is 14" or greater (due to the weight of the taps).

(If doing outside layups, apply boat cloth to a resin-rich saddle and main duct surface. Use the chart below to determine correct number of layers and glass width. Sanding of the exterior of the Saddle Tap and the main is required for diameters greater than 40" (1000mm) diameter to ensure good adhesion. Use the Saddle Tap Glass Chart below as a guide.)

Saddle Tap Glass Chart
(Only necessary if removing the hose clamps)

Nom. Diam. (in)	Nom. Diam. (mm)	# of Layers			
		Outside Glass Layups (Boat Cloth)			
		4"	6"	8"	12"
2" - 12"	50 - 300	None needed			
14" - 24"	350 - 600	1	1		
26" - 40"	650 - 1000	1	1	1	
42" - 60"	1050 - 1500	1	1	1	
over 60"	>1500	1	1	1	1

Installation Instructions – Bonding ATS Saddle Taps

ATS HOT TAPS

Applying ATS Saddle Taps onto Operating Systems

Note: ATS Hot Tap Video is available for visual instruction.
Note: This operation requires a blastgate (or damper) installed in the tap. Be sure to observe the required cleanroom protocol for cleanliness before performing the following procedure. The immediate area of the live tap operation may have to be temporarily closed off with plastic to contain stray particles.

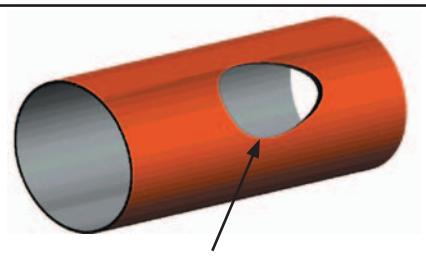

Figure 5

For this operation, two or more workers are recommended. Begin by locating the position of the tap on to the main duct. Place the tap into position. With a china marker or soap stone, mark the main duct along the inside diameter and the outside of the saddle flange. Also, put two hash marks on the tap and the main to mark the centerline for later alignment. This is important, because there will be no other way of positioning the taps in the exact spot once the hole is cut. With a 2nd man vacuuming, drill a 3/8” (10mm) hole on the outside edge of the inside diameter of the tap at the upstream end of the cut-out plate. Drill a 1/4" (6mm) hole near the upstream end of the cut-out plate and insert an eye screw. With the saber saw using a Carborundum or Carbide Tip blade (vacuum operating), place the blade in the 3/8” (10mm) hole and begin cutting around the outside of the inside diameter of the tap. Cut away 3/8” (10mm) extra material around the outside of the inner tap diameter marking until the cut-away plate (to be removed) begins to move easily as the perimeter cut nears completion. At this point slide a sheet metal plate over the cut area close to the eye screw. Hold the eye screw firmly to not allow the plate to fall into the air stream when the cut is complete. A cord can be attached to the eye screw to prevent the plate from falling into the duct.

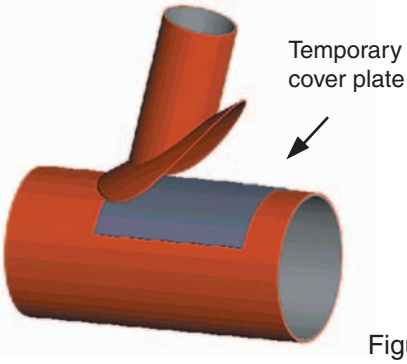

Figure 6

When the cutting is complete, pull the plate out and away as you slide the sheet metal completely over the hole. Temporarily secure the sheet metal plate to the duct exterior with cleanroom tape. The inside of the cutout plate may have been exposed to hazardous chemicals and must be decontaminated before it is disposed of.

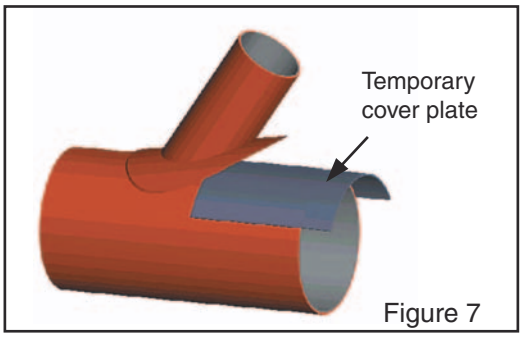

Figure 7

Place 6 mil clear plastic wrap over tap opening and tape securely. Apply ChemBond™ putty mix to the underside of the saddle tap, spreading the putty evenly–a layer about 1/8" (3mm) thick. Pull away the tape securing the sheet metal cover plate and slide the cover along the centerline of the main duct to the edge of the tap hole. Place the back end of the saddle flange against the main duct and align it with the saddle flange outline previously drawn. As you drop the tap toward the main duct to secure it into position, slide the cover plate out. At the moment the cover plate is removed, force the tap into its set position and hold it firmly until the draw bands are tightened to secure the tap firmly against the main header. (Note that ATS Saddle Taps come standard with receptacles for draw bands to slide through.)

Lower tap as cover plate is removed

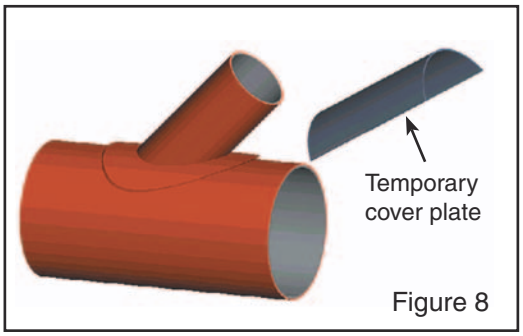

Figure 8

NOTE: As the saddle flange is pressed against the header duct with the draw bands, putty will ooze out around the saddle flange perimeter on the inside and outside of the tap. This excess putty can be used to seal the inside seam and protect the cut edge and exterior surface of the header duct from chemical attack. See next step below.

Make sure that you have donned appropriate chemically-resistant gloves and gear. Slit the plastic covering the branch opening and insert your gloved hand into the end of the tap, lifting the slide of the blast gate. Reach in and spread the putty that has oozed inside firmly into the seam between the saddle and the cut edge of the header duct. Smooth the putty all around to form a beveled transition along the seam to provide maximum chemical protection. As you pull your gloved hand out of the tap, slide the gate closed to block the introduction of air into the operating system so as not to disturb the air balance. Remove the plastic from the end of the tap. With a squeegee or gloved finger, bevel the excess putty mix on the outside perimeter of the saddle flange to create a smooth seam. (Only if removing the hose clamps–continue with the exterior bond, as previously described (for SaddleTaps 14" and greater)).

ATS Slip Collar Flange™

ChemBond™ putty is applied to the slip collar portion of the ATS Slip Collar Flange™. Apply a layer approximately 1/8" (3mm) thick. Insert slip collar flange into the duct. The putty will ooze around the outside of the slip collar flange and it will also squeeze out from under the slip collar on the inside. Smooth the putty on the interior to create a beveled surface. On the inside and outside of the joint, the ChemBond™ putty should be beveled by hand.

All slip collar flanges must have an exterior glass and resin lay-up to ensure a good bond. Allow the ChemBond™ putty seven days to cure (if without heat) prior to service. If operation of system is to begin in less than seven days, apply heat using a heat gun for twenty minutes prior to use. Use the ChemBond Joint Chart on page 152 for laminating sequence.

Slip Collar Flange–ATS Part #77

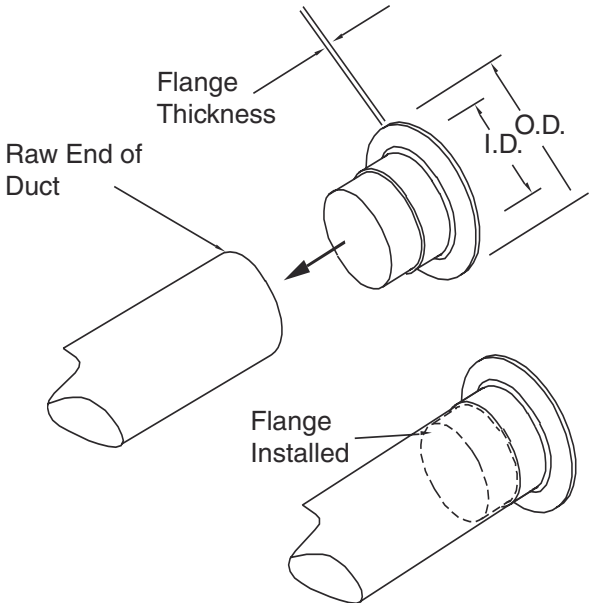

Installation Instructions – Bonding ATS Slip Collar Flanges

Riser Installation

Proper installation techniques for ATS Duct™ on risers is outlined below. The purpose of this detailed instruction is to eliminate the problems caused by condensate dripping down the inside wall of the duct.

Prior to final assembly of the riser section, the slip collar should be bonded into the lower end of each duct. As seen in the blow-up section below, the edge at which the slip collar meets the wall on the inside of the duct should be smeared with putty and chamfered (smoothed or rounded out) to form an impermeable barrier between the slip collar and the inside of the duct. This way, any condensate dripping down the wall of the duct will flow over the joining point between the slip collar and the duct (rather than work its way in between the slip collar and the duct).

In addition, pre-joining the downstream side of the slip collar will facilitate the final assembly of the riser.

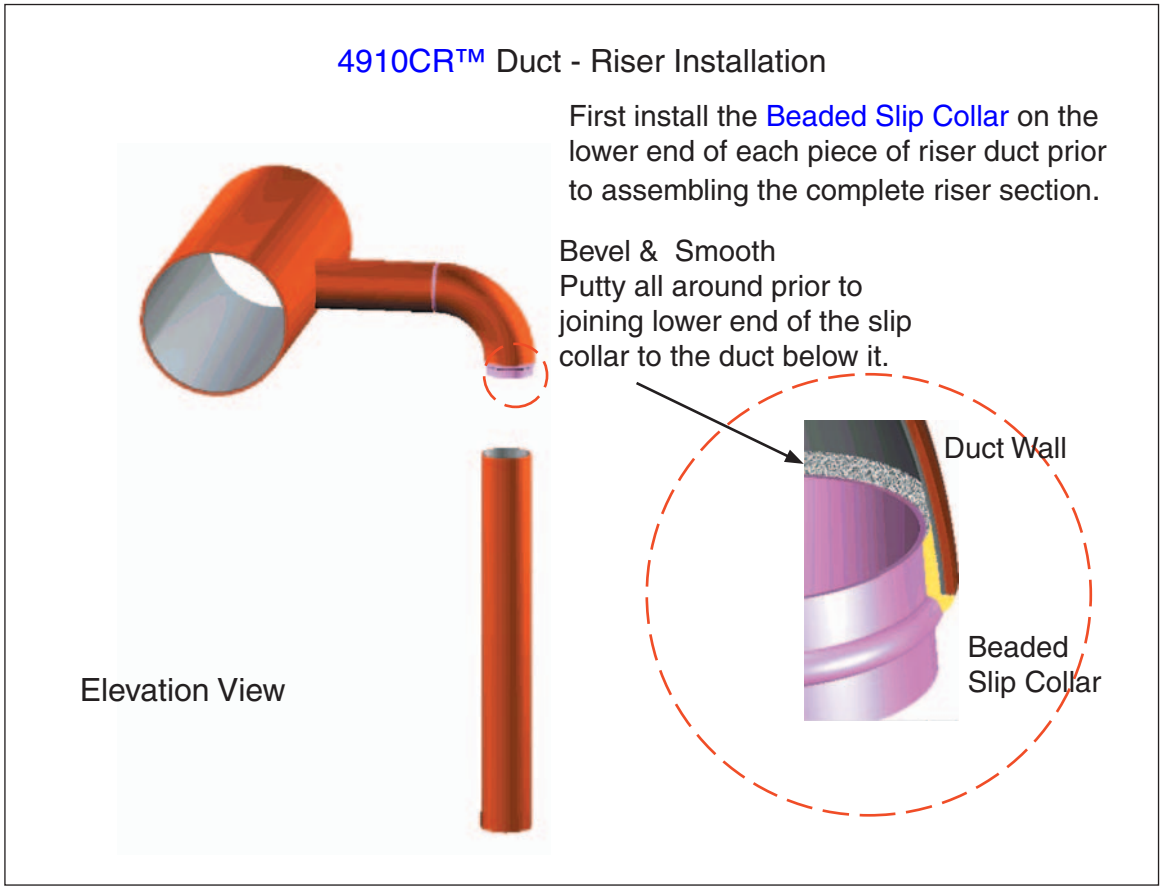

Installation Instructions – Riser Installation

ChemBond™ Joint Chart

ATS Internal Beaded Slip Collar Chart

dia. inches	1st. Layer inches Boat Cloth	2nd. Layer inches Boat Cloth	3rd. Layer inches Boat Cloth	4th. Layer inches Boat Cloth	5th. Layer inches Boat Cloth	ChemBond Putty Required ounces	ChemBond Putty Hardener Required cc's	Total sq.in. Boat Cloth required	ChemBond Resin Required ounces	ChemBond Standard Hardener Required cc's	Total Bonding Hours per Joint
	4"	6"	8"	10"	12"						
2	x					1.6	5	41	1.6	11	0.33
3	x					2.4	8	53	2.4	16	0.35
4	x					3.2	11	66	3.2	22	0.38
6	x					4.1	13	91	3.6	24	0.40
8	x					7.2	24	116	4.7	32	0.45
10	x	x				9.0	30	377	7.5	50	0.50
12	x	x				10.9	36	448	9.0	61	0.70
14	x	x				12.7	42	511	10.2	69	0.80
16	x	x				14.5	48	573	11.5	77	0.90
18	x	x				16.3	53	636	12.7	85	1.00
20	x	x				18.1	59	699	14.0	94	1.10
22	x	x				19.9	65	762	15.2	102	1.30
24	x	x	x			21.7	71	1506	30.1	202	1.50
26	x	x	x			23.5	77	1598	32.0	215	1.60
28	x	x	x			25.3	83	1711	34.2	230	1.70
30	x	x	x			40.7	134	1824	36.5	245	1.80
32	x	x	x			43.4	142	1937	38.7	260	1.90
34	x	x	x			46.1	151	2050	41.0	276	2.00
36	x	x	x			48.9	160	2163	43.3	291	2.10
38	x	x	x			51.6	169	2276	45.5	306	2.20
40	x	x	x	x		54.3	178	3717	74.3	500	2.40
42	x	x	x	x		57.0	187	3892	77.8	523	2.80
44	x	x	x	x		59.7	196	4068	81.4	547	3.00
46	x	x	x	x		62.4	205	4244	84.9	571	3.30
48	x	x	x	x		65.1	214	4420	88.4	594	3.60
50	x	x	x	x		67.9	223	4596	91.9	618	4.10
52	x	x	x	x		70.6	232	4772	95.4	642	4.20
54	x	x	x	x		73.3	241	4948	99.0	666	4.60
60	x	x	x	x		81.4	267	5476	109.5	736	5.00
62	x	x	x	x		84.1	277	5652	113.0	760	5.10
64	x	x	x	x	x	86.9	285	8325	166.5	1120	5.20
68	x	x	x	x	x	92.3	303	8828	176.6	1188	5.40
72	x	x	x	x	x	97.7	321	9329	186.6	1255	5.70
80	x	x	x	x	x	108.6	356	10336	206.7	1390	6.10
84	x	x	x	x	x	114.0	374	10839	216.8	1458	6.50
96	x	x	x	x	x	130.3	428	12346	246.9	1660	7.00

ATS H-Collar Chart

dia. inches	ChemBond Putty Required ounces	ChemBond Putty Hardener Required cc's	Total Bonding Hours per Joint
2	3.3	12	0.17
3	4.6	16	0.17
4	6.0	21	0.17
6	8.6	31	0.17
8	11.3	40	0.25
10	13.9	49	0.28
12	16.6	59	0.31
14	25.2	89	0.34
16	28.6	102	0.37
18	32.1	114	0.40
20	35.6	126	0.43
22	39.1	139	0.46
24	52.5	186	0.50
26	56.8	202	0.50
28	61.1	217	0.60
30	65.4	232	0.70
32	69.7	247	0.80
34	73.8	262	0.90
36	104.1	369	1.10
38	109.8	390	1.20
40	115.5	410	1.40
42	121.3	430	1.50
44	127.0	450	1.60
46	132.7	471	1.80
48	138.4	491	2.00

Cure Times for ChemBond™ Resin

The ATS ChemBond™ Resin combines superior chemical resistance and high structural strength with low flame and smoke characteristics. The ChemBond™ resin with glass reinforcement is used to bond two adjoining pieces of ATS Duct™ without pre-sanding the duct surface. This system is especially desirable in sensitive cleanroom environments where dust and odors are prohibited.

Unlike other resin systems, the ChemBond™ resin cure time is not dependent upon the ratio of hardener. The resin must be mixed in the proper ratio no matter what the temperature. To affect the cure time, the temperature of the resin needs to be adjusted. To shorten cure time the resin should be heated, and to lengthen cure time the resin should be cooled.

The ChemBond™ resin is designed to cure optimally at 75°F (24°C). At this temperature, the cure time of a joint is approximately 45 minutes. IMPORTANT NOTE: If the resin is left in a bucket, the pot life will be approximately 30 minutes at 70°F (21°C). The resin will cure at lower temperatures, down to 40°F (4°C). However, do not allow the resin to freeze. Resin that has frozen is no longer usable.

If operation of system is to begin in less than seven days, apply heat using a heat gun for twenty minutes.

Several different methods of controlling resin cure rates are available.

1. The container of resin can be placed in a water bath to either warm or cool to a desired temperature decreasing or increasing the cure time accordingly. **Ensure the water does not come in contact with the resin.**
2. A heat gun can be used to warm the area that will be bonded, decreasing cure time.

The chart below can be used as a guide to resin cure times at various temperatures. The times may vary dependent upon field conditions.

Cure Time For ChemBond Resin Based On Temperature
(Cure time refers to how long it will take for the resin/putty joint to harden)

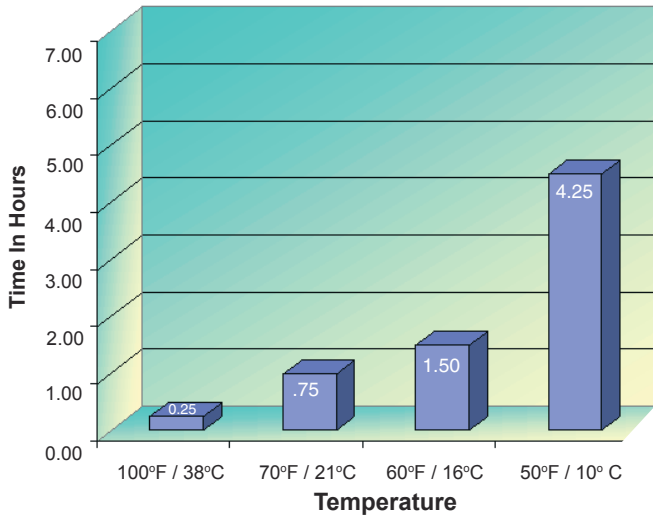

Installation Instructions – Cure Times for ChemBond™ Resin

Wet Bench Hook-Up

ATS recommends resin coating the edges of all duct and fittings prior to installation when hooking up to wet-etch tools. Resin coating the raw cut edges of the duct will give added corrosion resistance protection to the field joint, especially to “Hot Sulfuric Acid” and related aggressive oxidizing reagents. The illustration of coating the edges below:

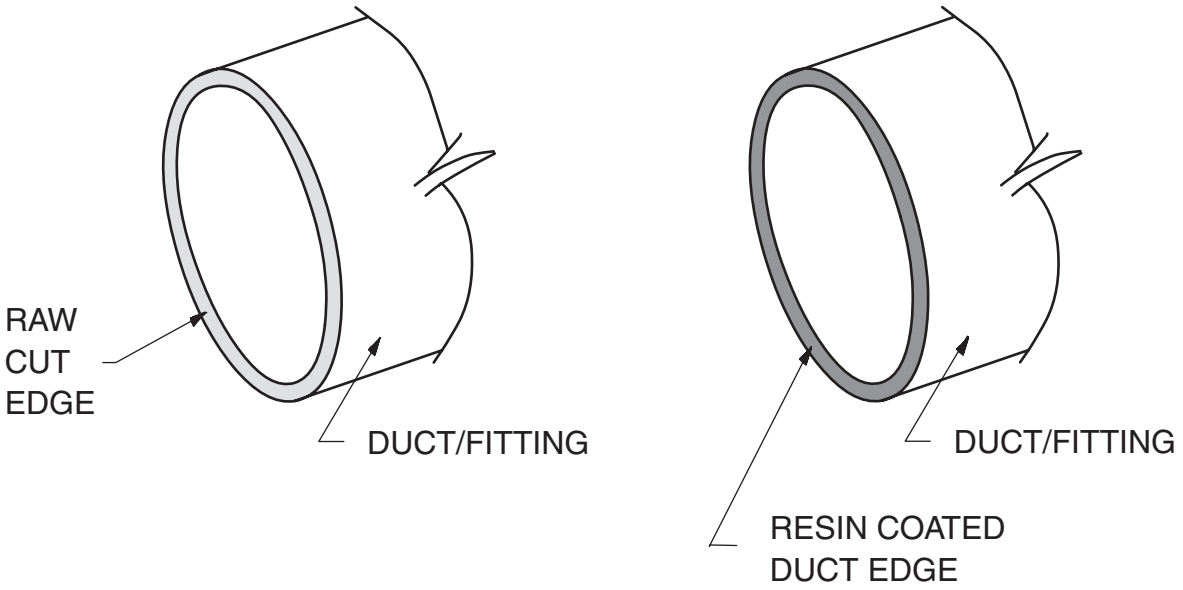

Resin Coating Steps

IMPORTANT NOTE: For the purposes of coating the cut edges of the duct you will use ChemBond™ Resin; instead of catalyzing it with Standard Hardener, use the Putty hardener at a ratio of 14.5% Hardener to the weight of the resin.

1. Mix a small batch of ChemBond Resin and PUTTY Hardener to the ratios in the note above.
2. Using a brush or roller, apply resin mix to the cut edges of the duct or fitting.
3. Be sure to cover the edges thoroughly. Be sure all raw glass and dry fibers are covered.
   (Alternatively, Dow Derakane 510A Vinyl Ester Resin can be used.)

Please contact ATS’ Engineering department with questions regarding resin coating duct edges.

ATS Test/Inspection Port Assembly™ Installation Guide

Part Type #460

The ATS Test Port Assembly should be used whenever a contractor is required to drill holes in the duct. This assembly provides protection to the duct wall, while allowing the hole to be accessed in the future. Typically, this is necessary for air balancing or as an inspection port for video probes. This assembly also seals the hole.

Step 1: Using a Hole Saw, bore a hole equivalent to the I.D. of the threads on the male adapter. [See ATS Part Type #465 in the Mechanical Drawing Guide for easy drilling and threading.]

Step 2: Use a Standard NPT (National Pipe Thread) Metal Threaded Nipple to tap the hole and form threads into the FRP. This will avoid stripping the PVC threads and insure a secure bond. (Standard NPT Metal Nipple can be provided on request. For maximum ease, request Part Type #465 from ATS.)

Step 3: Use ChemBond™ Putty Mix to coat the exposed edge of the hole and then liberally coat the exterior threads of the assembly.

Step 4: Screw the Test Port Assembly™ in place until threads are no longer exposed. ChemBond™ Putty should be applied around the outside of the ATS Test Port Assembly™.

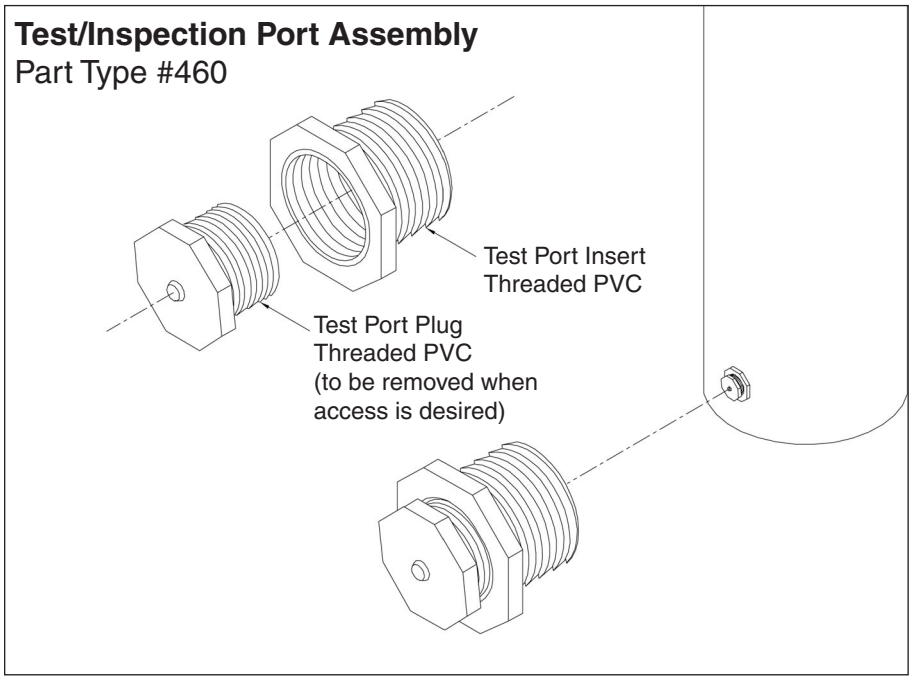

Installation Instructions – Test Port Installation

ATS Drain Tap Assembly™ Installation Guide

Part Type #450

Step 1: Using a Hole Saw, bore a hole equivalent to the I.D. of the threads on the ATS Drain Tap Assembly™.

Step 2: Use a Standard NPT Metal Threaded Nipple (not shown) to tap the hole and form threads into the FRP. This will avoid stripping the PVC threads and insure a secure bond.

Step 3: Use ChemBond™ Putty Mix to coat the exposed edge of the hole and then liberally coat the threads of the male adapter.

Step 4: Screw the Drain Tap Assembly in place until threads are no longer exposed. ChemBond™ Putty should be applied around the outside edge of the ATS Drain Tap Assembly™ to complete the connection.

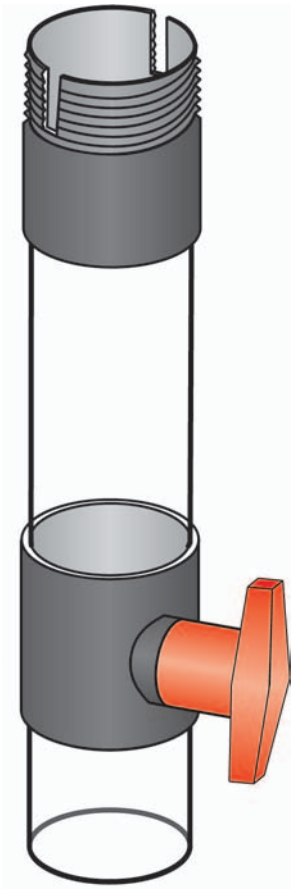

Drain Tap Assembly

Caution!

On existing systems that may contain hazardous materials and condensate, use extreme caution and proper safety gear to protect the person drilling holes. Some systems have contained up to 500 gallons of liquid acid! Provisions should be made when drilling holes. Be prepared with a crew with protective gear and a means to deal with condensate.

Guidelines for Hanging ATS Duct™

Most duct supports generate some type of stress concentrations, which may cause localized micro-cracking, localized crazing, or other types of defects. For exterior duct, in addition to dead loads, both seismic and wind loads may be imposed on the duct system. Other specialized loads may also affect the design of the duct and its support system such as thermal expansion or contraction, loads from equipment suspended from the duct, large valves, and other unique loads that may be imposed on the duct and the duct support systems.

The support systems for ducting may provide restraint in any one of three directions against both displacement and/or rotation. Careful consideration must be given when restraining duct to avoid the development of excessive internal duct stresses such as possible expansion or contraction due to temperature variations. The duct support systems should eliminate or minimize the development of such internal duct stresses by choosing appropriate degrees of restraint.

ATS has developed a series of recommendations for duct supports with consideration given to the following:

a) Type of loads, including duct weight, wind, seismic, etc.

b) Placement of the duct; that is, horizontal, vertical, or diagonal position.

c) Duct usage in terms of vacuum and/or pressure.

d) Degrees of restraint provided by supports.

e) The diameter and the thickness of the ATS Duct™.

f) Available existing structural supports such as steel frames.

g) Maximum distance between adjacent duct supports.

ATS has developed a set of twelve design examples for ATS Duct™ supports. These sample duct support designs are intended to provide the engineer with guidelines as to methods of analysis for his own unique duct support system. Examples of these twelve sample duct support systems are provided in individual reports which are available to ATS Duct™ customers. These reports provide sample calculations for a given set of load conditions and given diameters.

The twelve duct support systems include the following styles:

Style A — Clevis type support system–intended primarily for interior applications with duct diameters up to 16 in.

Style B — Band style support system with a single hanger rod–intended primarily for interior applications with duct diameters up to 16 in.

Style C — U-strap style support system–intended primarily for interior applications with duct diameters up to 24 in.

Style D	U-bolt type of duct support system–intended for interior and exterior applications with duct diameters up to 12 in. The U-bolts are an off-the-shelf item.
Style E1	Band type duct support system with double hanger rods–intended primarily for interior applications for duct diameters up to 16 in.
Style E2	Same as Style E1 except steel angles are used instead of hanger rods.
Style F	Trapeze type duct support system–intended primarily for interior applications for duct diameters up to 84 in.
Style G	Trapeze box type support system–intended primarily for exterior applications for diameters up to 84 in.
Style H	Same as Style G except a fiberglass sleeve is bonded to the duct which will allow for greater vertical or horizontal loads.
Style I	Strap type duct support system with stiff vertical columns–intended for interior or exterior applications for duct diameters up to 60 in.
Style J	Partial saddle strap type of duct support system–intended for exterior applications for duct diameters up to 36 in.
Style K	Saddle strap type duct support system–intended for interior and exterior applications for duct diameters up to 84 in.

Variations of the above duct support systems may be utilized, provided the stresses induced in the duct do not exceed the calculated stress levels obtained for the above twelve duct support systems.

NOTE: DO NOT OVERTIGHTEN SUPPORT BANDS, STRAPS OR U-BOLTS THAT MAY CRUSH OR BIND THE DUCTWORK.

Never allow the duct to rest directly on Uni-strut or any other narrow flat surface. (The duct tends to warp over time if it is only supported on one small point.)

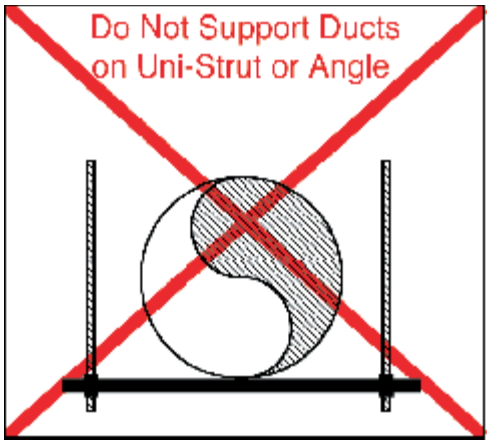

Installation Instructions – Guidelines for Hanging ATS Duct

Recommended Duct Support Systems

The following are support systems recommended by ATS, Inc.

Style A Duct Support System

Clevis Style Duct Support (Interior, Horizontal Only)*
2”Ø to 16”Ø

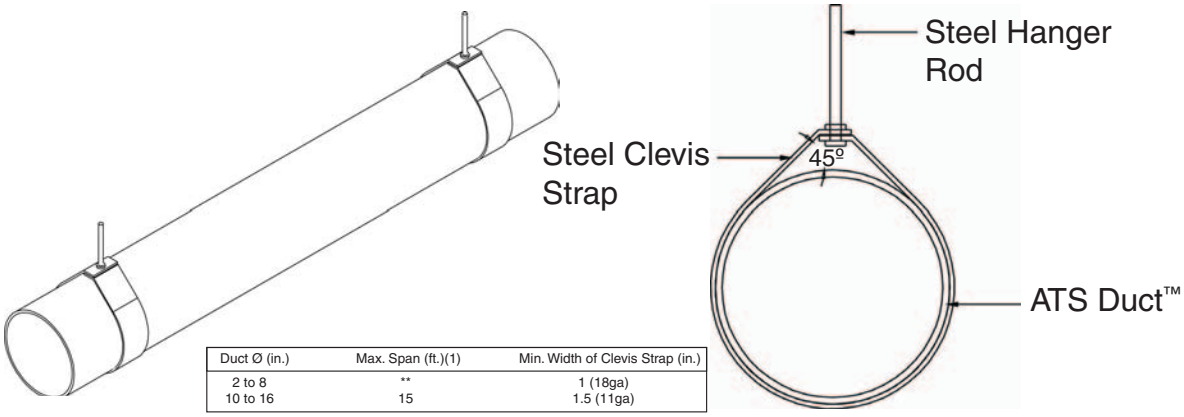

Duct Ø (in.)	Max. Span (ft.)(1)	Min. Width of Clevis Strap (in.)
2 to 8	**	1 (18ga)
10 to 16	15	1.5 (11ga)

* This duct support system can resist vertical loads but not horizontal seismic or wind loads.
** Based on allowable deflection limits.
(1) Spans given in this table apply only to dead weight of the duct itself. For other loads, check both stresses and deflections for the actual duct span chosen.

Style B Duct Support System

Band Style Duct Support with Single Hanger Rod (Interior, Horizontal Only)*
2”Ø to 16”Ø

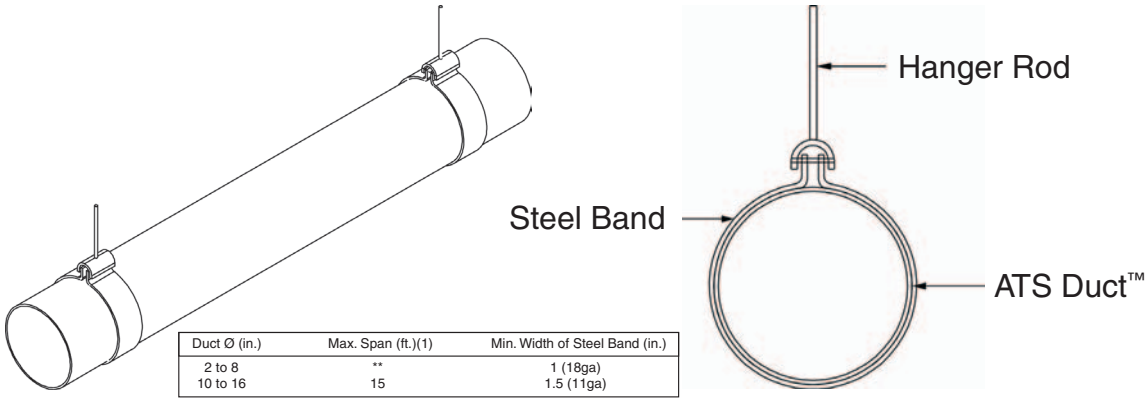

Duct Ø (in.)	Max. Span (ft.)(1)	Min. Width of Steel Band (in.)
2 to 8	**	1 (18ga)
10 to 16	15	1.5 (11ga)

* This duct support system can resist vertical loads but not horizontal seismic or wind loads.
** Based on allowable deflection limits.
(1) Spans given in this table apply only to dead weight of the duct itself. For other loads, check both stresses and deflections for the actual duct span chosen.

Style C Duct Support System

U-Strap Duct Support (Interior, Horizontal Only)*

2”Ø to 24”Ø

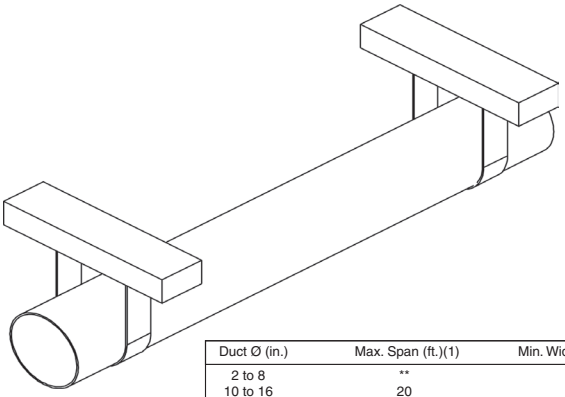

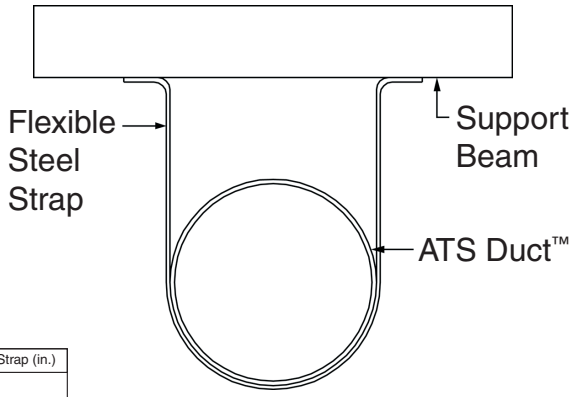

Duct Ø (in.)	Max. Span (ft.)(1)	Min. Width of Steel Strap (in.)
2 to 8	**	1 (18ga)
10 to 16	20	1.5 (11ga)
18 to 24	20	2 (11ga)

* This duct support system can resist vertical loads but not horizontal seismic or wind loads.

** Based on allowable deflection limits.

(1) Spans given in this table apply only to dead weight of the duct itself. For other loads, check both stresses and deflections for the actual duct span chosen.

Style D Duct Support System

U-Bolt Style Duct Support (Interior and Exterior, Horizontal and Vertical)*

2”Ø to 12”Ø

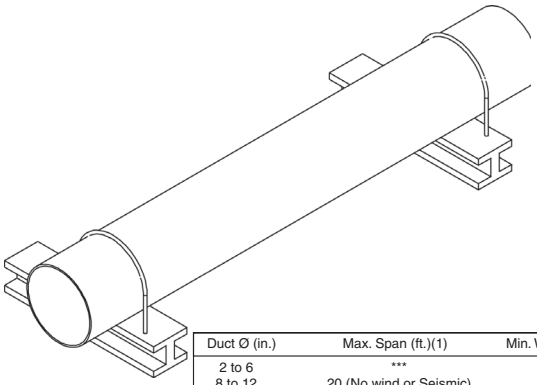

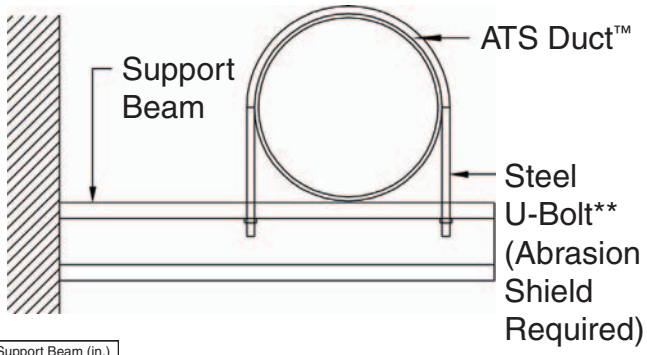

Duct Ø (in.)	Max. Span (ft.)(1)	Min. Width of Support Beam (in.)
2 to 6	***	1
8 to 12	20 (No wind or Seismic) 15 (With wind or Seismic)	1.5

* This duct could also be suspended from the bottom rather than the top using the same support restrictions.

** The diameter of U-bolt based on applied vertical and/or horizontal load. Both wind and seismic loads possible using this support system.

*** Based on allowable deflection limits.

(1) Spans given in this table apply only to dead weight of the duct itself. For other loads, check both stresses and deflections for the actual duct span chosen.

Style E1 Duct Support System

Band Style Duct Support with Double Hanger Rods (Interior, Horizontal Only)

2”Ø to 16”Ø

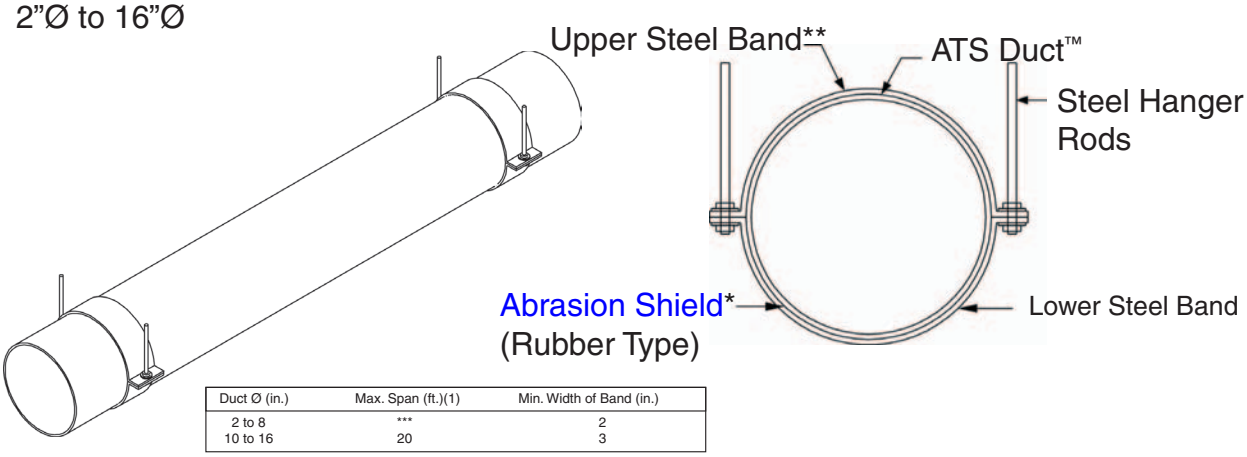

Duct Ø (in.)	Max. Span (ft.)(1)	Min. Width of Band (in.)
2 to 8	***	2
10 to 16	20	3

* Abrasion shield should be provided for the entire duct perimeter with the same width as the steel band if installed outdoors or in areas of temperature fluctuation.

** Steel bands are not required to maintain roundness of the duct under vacuum.

*** Based on allowable deflection limits.

(1) Spans given in this table apply only to dead weight of the duct itself. For other loads, check both stresses and deflections for the actual duct span chosen.

Style E2 Duct Support System

Band Style Duct Support with Double Hanger Angles (Interior, Horizontal Only)

2”Ø to 60”Ø

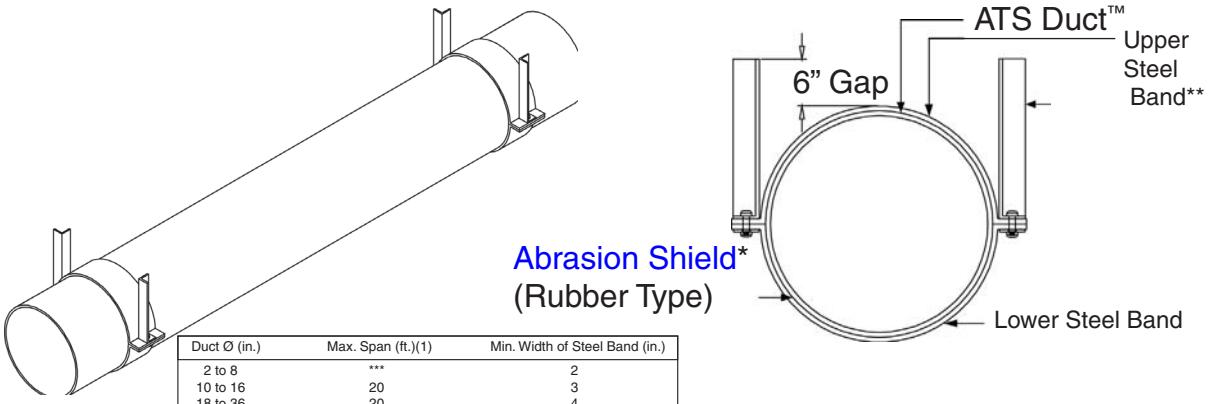

Duct Ø (in.)	Max. Span (ft.)(1)	Min. Width of Steel Band (in.)
2 to 8	***	2
10 to 16	20	3
18 to 36	20	4
38 to 60	20	6

* Abrasion shield should be provided for the entire duct perimeter with the same width as the steel band if installed outdoors or in areas of temperature fluctuation.

** Steel bands are not required to maintain roundness of the duct under vacuum.

*** Based on allowable deflection limits.

(1) Spans given in this table apply only to dead weight of the duct itself. For other loads, check both stresses and deflections for the actual duct span chosen.

Style F Duct Support System

Trapeze Style Duct Support (Interior, Horizontal Only)
2”Ø to 84”Ø

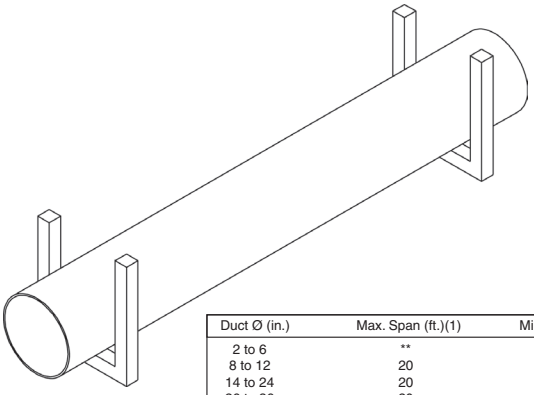

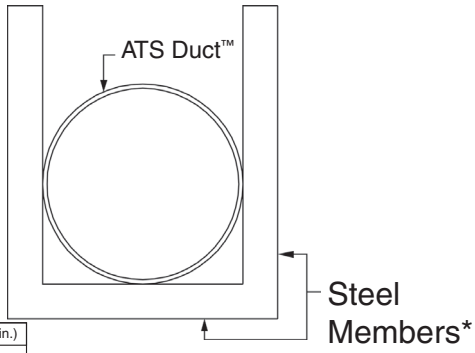

Duct Ø (in.)	Max. Span (ft.)(1)	Min. Width of Steel Members (in.)
2 to 6	**	1
8 to 12	20	1.5
14 to 24	20	2
26 to 36	20	3
38 to 48	15	5
50 to 84	15	6

* Vertical steel support members must resist ovaling of duct for duct diameters larger than 24 in.

** Based on allowable deflection limits.

(1) Spans given in this table apply only to dead weight of the duct itself. For other loads, check both stresses and deflections for the actual duct span chosen.

Style G Duct Support System

Trapeze Box Style Duct Support (Exterior, Horizontal Only)**
(No fiberglass sleeve) 14”Ø to 84”Ø

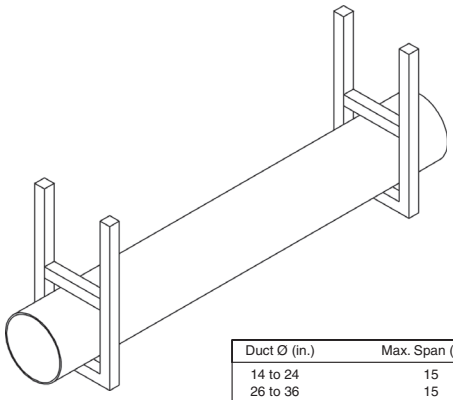

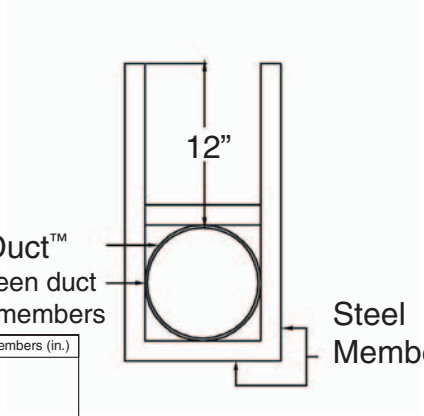

Duct Ø (in.)	Max. Span (ft.)(1)	Min. Width of Steel Members (in.)
14 to 24	15	2
26 to 36	15	3
38 to 48	15	4
50 to 60	15	5
62 to 84	15	6

* Steel support members must resist ovaling of duct for duct diameters larger than 24 in.

** Recommended for all seismic zones and wind loads below 100Mph.

(1) Spans given in this table apply only to dead weight of the duct itself. For other loads, check both stresses and deflections for the actual duct span chosen.

Style H Duct Support System

Trapeze Box Style Duct Support (Exterior, Horizontal Only)** (Single fiberglass sleeve) 14"Ø to 84"Ø

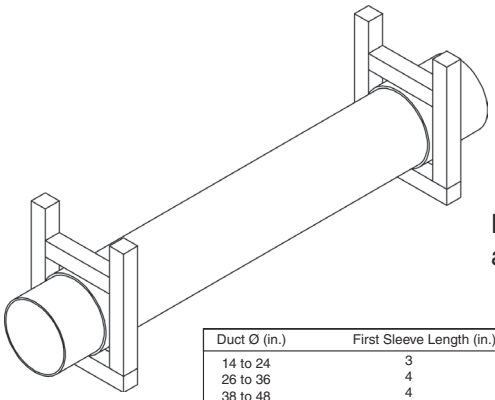

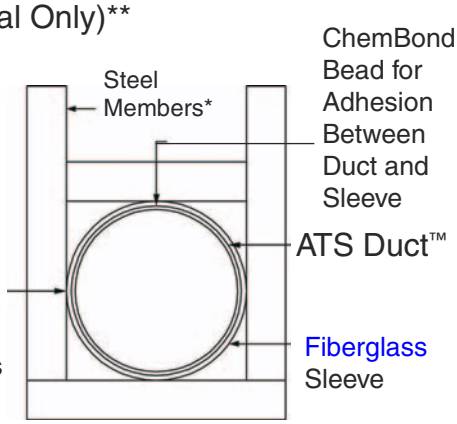

Duct Ø (in.)	First Sleeve Length (in.)	Max. Span (ft.)(1)	Min. Width of Steel Members (in.)
14 to 24	3	15	2
26 to 36	4	15	3
38 to 48	4	15	3
50 to 60	5	15	3
62 to 84	6	15	4

* Design steel support members bases on total dead and live loads. Steel support members must prevent ovaling of the duct.

** This duct support system recommended for all seismic zones but not recommended for wind speeds above 120Mph.

(1) Spans given in this table apply only to dead weight of the duct itself. For other loads, check both stresses and deflections for the actual duct span chosen.

Style I Duct Support System

Strap Style Duct Support with Stiff Columns (Interior and Exterior, Horizontal and Vertical) 14"Ø to 60"Ø

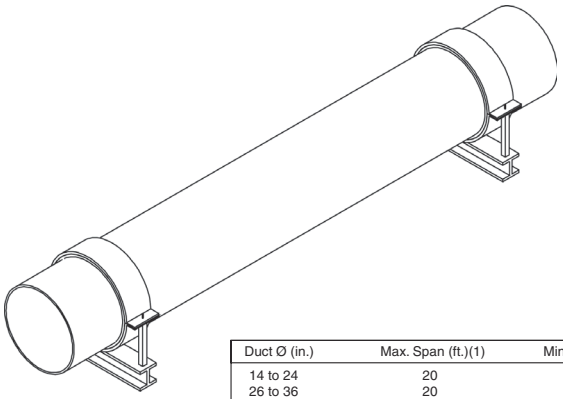

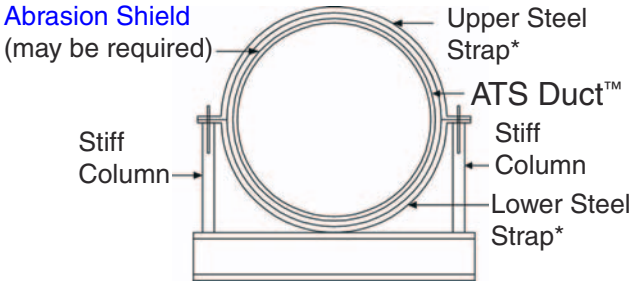

Duct Ø (in.)	Max. Span (ft.)(1)	Min. Width of Straps (in.)
14 to 24	20	3
26 to 36	20	4
38 to 48	20	5
50 to 60	20	6

* Design strap based on actual seismic, and/or dead loads. This strap support system is not recommended for wind loads.

(1) Spans given in this table apply only to dead weight of the duct itself. For other loads, check both stresses and deflections for the actual duct span chosen.

Style J Duct Support System

Saddle-Strap Style Duct Support (Exterior, Horizontal or Vertical)**
8”Ø to 36”Ø

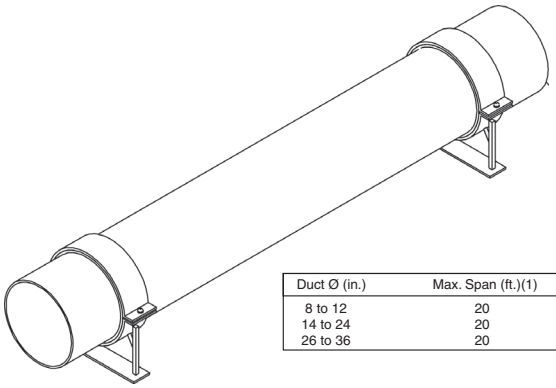

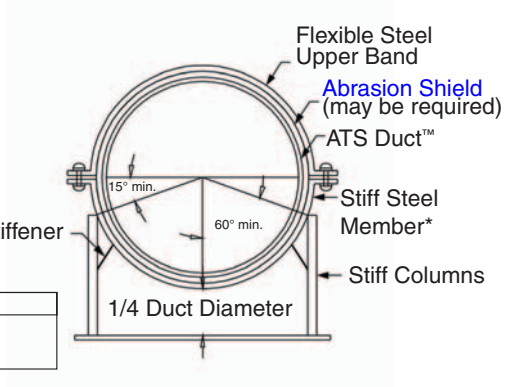

Duct Ø (in.)	Max. Span (ft.)(1)	Min. Width of Straps (in.)
8 to 12	20	3
14 to 24	20	3
26 to 36	20	3

* Lower Band must be stiff to prevent ovaling of duct.

** This duct support system recommended for all seismic zones but not recommended for wind speeds above 80 Mph.

(1) Spans given in this table apply only to dead weight of the duct itself. For other loads, check both stresses and deflections for the actual duct span chosen.

Style K Duct Support System

Saddle-Strap Style Duct Support (Interior and Exterior, Horizontal and Vertical)
14”Ø to 84”Ø

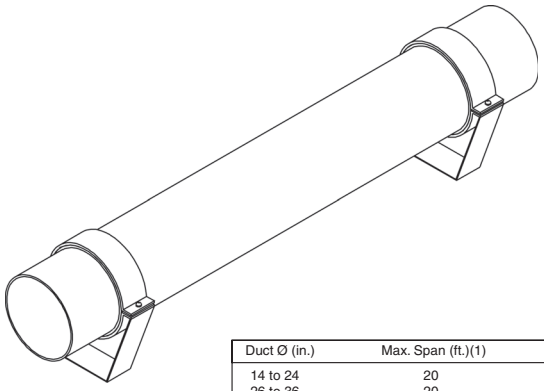

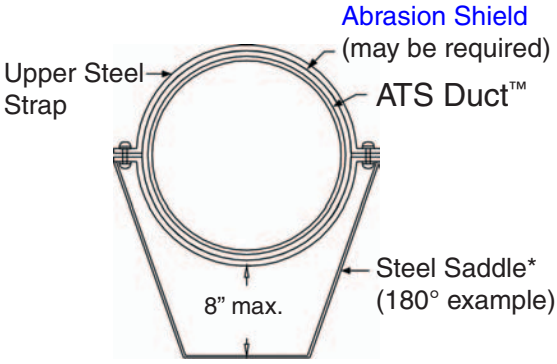

Duct Ø (in.)	Max. Span (ft.)(1)	Min. Width of Saddle (in.)
14 to 24	20	3
26 to 36	20	4
38 to 60	20	5
62 to 84	20	6

* Thickness of Steel Saddle and other dimension based on live loads.
Saddles must be 180° for 36” dia. and larger duct.
Saddles must be a minimum of 150° for 16” to 34” dia. duct.
Saddles must be a minimum of 120° for ducts below 16” dia.

(1) Spans given in this table apply only to dead weight of the duct itself. For other loads, check both stresses and deflections for the actual duct span chosen.

JOINING DISSIMILAR MATERIALS TO ATS Duct™ WITH CHEMBOND™ RESIN

ChemBond™ resin can be used to bond ATS duct to itself or to other types of plastic or metal ductwork. The most common plastic ducts are conventional polyester and vinyl ester fiberglass reinforced plastic (FRP), polyvinyl chloride (PVC) and polypropylene (PP). Metal ducts are either usually made of stainless steel (SS) or galvanized steel (GS). Below are the methods that we recommend to achieve both a chemical and mechanical bond to these materials. Refer to our installation guide for the recommended glass widths, the number of glass reinforcement layers and the correct methods for handling and using the resin.

INSTALLATION

FRP

Regular FRP duct typically is supplied with an exterior surface that has a slick gel coat finish or with an intumescent (fire protective) coating. These exterior finishes must be removed by lightly sanding the surface to expose the inner glass fibers of the duct structure prior to the application of the ChemBond™ resin and the glass reinforcement materials. After the area to be bonded has been sanded, the surface must be cleaned with a solvent based agent to remove the surface dust and any wax added to the exterior resin for curing purposes.

PVC

Although ATS ChemBond resin will bond ATS duct directly to PVC, it requires sanding to achieve a good bond. Therefore, ATS has developed a method to join ATS duct directly to PVC without the need for sanding. (See page 22.) An FRP threaded coupling can be provided bonded to a piece of ATS Duct or provided as an ATS Threaded Slip Collar™. A PVC threaded coupling with a female-to-female connection (one side threaded and one side smooth) is used to join ATS to PVC. If an ATS Threaded Slip Collar™ is ordered, it is joined to ATS using an ATS' standard ChemBond putty joint on the slip collar side. The threaded portion is threaded together with the PVC coupling using Teflon tape. Normal PVC adhesive is used to join the smooth coupling end to the existing PVC connection point.

PP (Polypropylene) and PPs (Polypropylene "Schwerentflammbar")

The exterior surface of the PP must be carefully heated with a high wattage heat gun or a propane torch. Only apply enough heat to change the shiny surface of the PP to a dull, discolored texture. A test to measure the appropriate amount of heat is to heat until the endpoint of a paper clip can be thrust into the surface approximately 0.020 in. (0.5 mm). Be careful not to melt and deform the plastic structure. The surface is prepared properly when water "sheets off" evenly on the PP surface (instead of beading). At this point, the ion structure of the surface has changed and the ChemBond™ resin will bond to the PP surface. Coarse grit sanding will increase the mechanical bond strength. (See report on this method on page 237.)

Stainless Steel & Galvanized Metal

The outer surface of the metal must be cleaned with a solvent agent to remove protective oils and foreign particles. The surface of the metal should then be coarsely sanded before applying the ChemBond™ resin. Grooving the outer wall of the metal with a file can add tensile strength to the completed joint.

If you need further explanation, please contact the ATS Products' Engineering Department at (510) 234-3173.

ATS Duct™ Field Repair

If it is necessary to repair ATS Duct that has been damaged during shipment or by other means, in almost every instance, the duct can be repaired at the job site. Below are our recommended procedures for performing both liner and exterior structural repairs at the site.

Liner Damage:

1. Spider Cracks: Generally these can occur on the back heel of elbows. If someone drops the elbow, a "Spider Crack" (small cracks in the liner emanating from the impact point on the exterior surface) develops in the corrosion resistant liner as shown below. (See figure 1.)

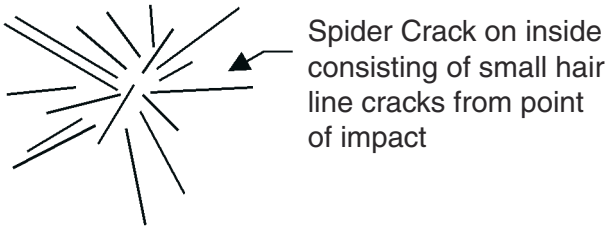

Figure 1

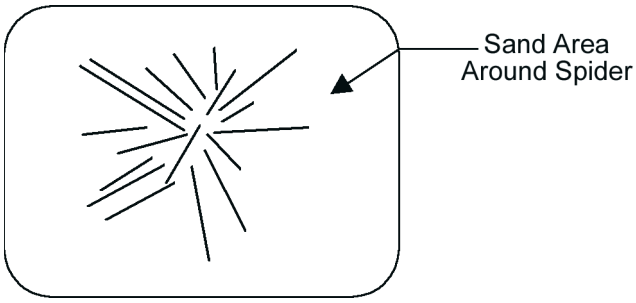

Figure 2

Repair of Spider Cracks: Sand the surface 2 to 3 inches around the perimeter of the crack. (See Figure 2.) Using ChemBond resin mix, wet out the sanded area with a liberal amount of resin. Next, apply one layer of nexus veil onto the resin and finish the repair by wetting out the veil. For a mirror finish, place a waxed Mylar film over the repair layup and roll out any air pockets that become trapped between the Mylar and the resin. After the resin has cured, remove the Mylar. The repair process is complete.

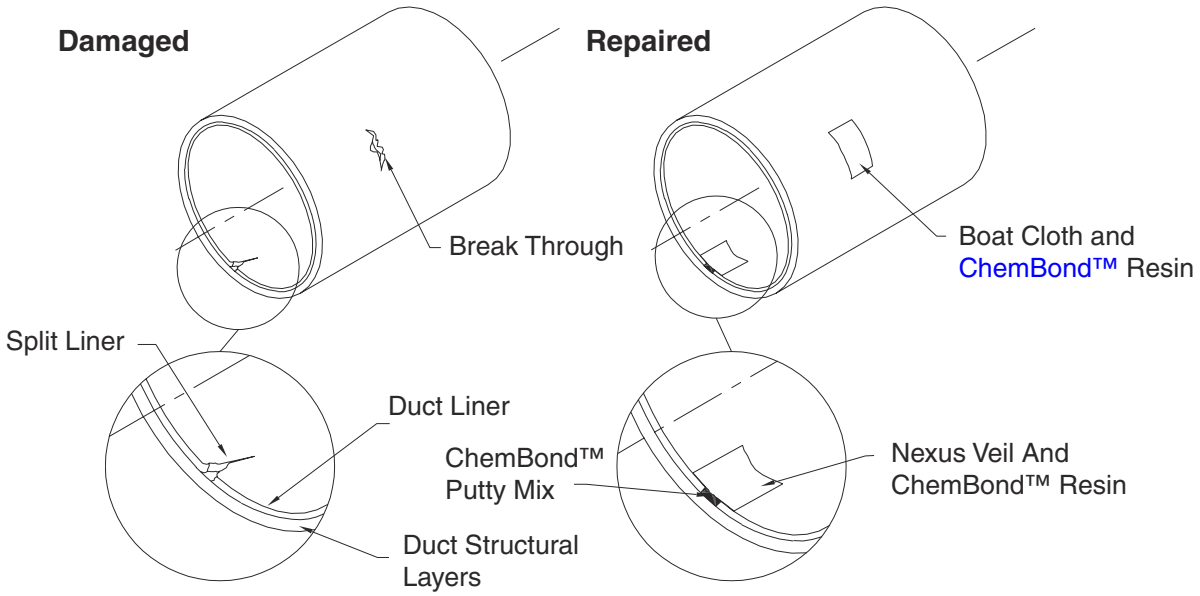

Figure 3

A split liner (see Figure 3) is usually near the end of the duct or fitting. It may be a result of two pieces coming into contact during shipment. In most cases, the outer structural duct wall is slightly scarred, but the inner corrosion resistant liner has split away from the structural wall.

Split Liner Repair (if split is close to the end of the duct):

Sand the area to make a uniform flat surface and to remove glass laminate splinters. Apply a liberal amount of ChemBond putty mixture into the repair area and a thin film of putty around the interior perimeter of the duct end. Next, apply a liberal amount of putty to one end of the slip collar used to make a field joint connection (as described in our Duct Installation Instructions pg 143). Insert the putty end of the collar into the duct or fitting end and smooth the excess putty into the collar and liner seam. Remove the excess putty from the exterior surface of the collar, around the bead, if the joint will be completed at a later time.

Split Liner Repair (if the split is not close to the end of the duct):

Sand the inner surface until uniformly flat, if the split is raised. Fill the liner void with ChemBond putty mix. Next, wet out the putty and a few inches of the good liner surface with a mixture of ChemBond resin. Then, apply a layer of Nexus veil to the resin coated area, followed by a final application of ChemBond resin. For a mirror finish, place a Mylar film over the repair layup and roll out any air pockets that become trapped between the Mylar and the resin. After the resin has cured, remove the Mylar and the repair process is complete.

Break Through (see Fig. 3):

A break through is where there has been a complete breach through the duct wall and liner. On small diameter ducts (those that are not accessible for a person to repair the damage from inside the duct), we advise cutting the duct circumferentially, removing the damage by creating two smaller lengths of duct. On larger diameter ducts (i.e. 24” diameter and larger) where access inside the duct is possible, repairs can be made to restore the duct integrity.

Repair of Break Through:

Inside Repair: Sand away any glass laminate splinters and the immediate area around the damaged area on the inner liner surface. Tape a piece of flexible plastic, such as polypropylene to the outer duct surface, covering the hole in the duct. Apply a mixture of ChemBond™ putty into the void in the duct wall from inside the duct, pressing the mixture into the material covering the hole. Next, wet out the putty and a few inches of the good liner surface with a mixture of ChemBond™ resin. Then, apply a layer of Nexus veil to the resin coated area and saturate the veil with ChemBond resin. Add a second layer of Nexus veil and a final application of resin. For a mirror finish, place a waxed Mylar film over the repair layup and roll out any air pockets that become trapped between the Mylar and the resin. After the resin has cured, remove the Mylar and the liner repair process is complete.

Outside Repair: After the resin patch on the inside has cured, remove the backing material from the outside duct wall. Apply liberal amount of ChemBond™ resin to the repair area and 3 to 4 inches of the undamaged exterior duct surface around the perimeter of the patch. Apply two layers of 9-oz. boat cloth saturated with ChemBond™ resin over the entire wet out area to complete the repair.

If you have any questions or you need further assistance regarding duct field repair, please contact our Engineering Department at +1-510-234-3173.

Guidelines for Exterior Coatings

IMPORTANT NOTE:
It is necessary to coat all exterior ductwork. ATS' manufacturers recommendations require exterior duct to be painted with CleanCoat™ or other comparable coatings to provide UV and weather protection for maximum service life. (Also see expansion joints for roof top duct on page 171.)

General Recommendations:

1. When using coatings other than ATS Cleancoat™ or ATS ChemSeal™, check local restrictions on those products regarding VOC content before considering their use. ATS Cleancoat™ and ChemSeal™ are 100% solid coatings.

2. Do not use water based intumescent paints. They tend to crack and flake off in time, creating problems in cleanrooms. On outdoor use, the intumescent salts leach out in time and intumescent paints have poor weather resistance.

Cleanroom Coatings:
If the product is to be installed in cleanroom areas and the owner wishes to paint the ducts, we recommend ATS CleanCoat™. ATS CleanCoat™ is an odorless interior coating with excellent abrasion resistance, adhesion characteristics, and chemical resistance to vapors and liquid splashes. It can be applied directly to the clean/dry exterior of ATS Duct™ systems without sanding or scuffing the surface, which makes it an ideal coating inside the cleanroom. ATS 4910CR Duct™, when coated with CleanCoat™, retains its FM Approval for installation without sprinklers.

Outdoor Coating:
For the highest possible performance ATS Cleancoat™ should be used for applications where there are extreme changes in the weather. ATS Cleancoat™ is an interior/exterior coating with excellent abrasion resistance, UV resistance, adhesion characteristics, low flame and smoke characteristics, and chemical resistance. CleanCoat™ is a 100% solids coating that can be applied to the clean, dry exterior surface of ATS Duct™ without sanding or scuffing the duct surface. CleanCoat™ is available in 1 and 5 gallon containers in gray, white, or other colors as desired, such as brown. It can be applied to the duct with a brush, roller or it can be sprayed on with a paint gun on outdoor duct or on sections of duct prior to installation in the cleanroom.

Note: The color of the exterior coating on outdoor installations will effect the surface temperature of the duct. Light colors will reflect sunlight and keep the duct surface closer to ambient temperatures. Dark colors will absorb solar heat and increase the duct temperature well above ambient. Dark colored ducts will expand and contract at a much greater rate than light colored duct. (See Coefficient of Thermal Expansion Example on Page 171.)

ATS ChemSeal™ is a special chemical resistant coating with excellent abrasion and adhesion characteristics. The ideal application for ChemSeal™ is on ductwork where the exterior surface will be exposed to chemical spills, such as plating process exhausts. It can be applied to the duct with a brush, roller or it can be sprayed on with a paint gun.

Check with ATS' Sales and Engineering Department at (510) 234-3173, if you have any questions regarding which coating would be appropriate for your particular application.

EXPANSION JOINTS
(Can be provided by ATS on request)

On outdoor installations, expansion joints must be installed on straight duct runs greater than seventy feet. We recommend expansion joints made of EPDM. EPDM will not only provide Ultraviolet protection but corrosion resistance to alkalis and acids as well. EPDM flexible connectors are recommended connecting the duct and the scrubber and fan to minimize the vibration transfer from the equipment through the duct.

Coefficient of Thermal Expansion of ATS Duct: 2.0 X in/in X 10^{-5} X Δ°F of Duct (not ambient temp.)
Example: 100' at 100 Δ°F = 2.0 X 1440" X .00001 X 100 = 2.88"

Important Note: Δ°F refers to change in duct temperature, not ambient temperature.
See page 169 for the influence of color on duct temperature.

A rule of thumb to use in figuring expansion is three inches of expansion (+ or -) per hundred feet of ATS duct for every one hundred degrees in Fahrenheit temperature fluctuation. This is equivalent to 75 mm per 30+ m per 37.75 degrees Celsius temperature fluctuation.

EXPANSION JOINT
STYLE OPTIONS

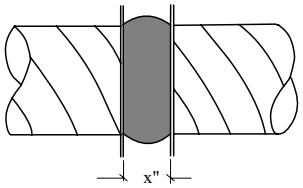

Duct Dia.	X"
2" to 18"	6"
Over 18"	9"

Fig. 1. ***FLANGE TO FLANGE***
(BACKUP RINGS RECOMMENDED)

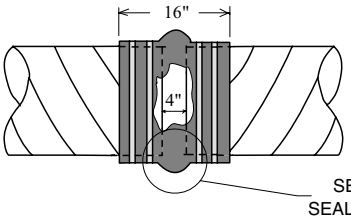

Fig. 2. ***ARCH STYLE SLEEVE***

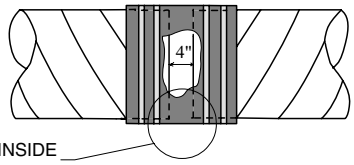

Fig. 3. ***STRAIGHT SLEEVE***

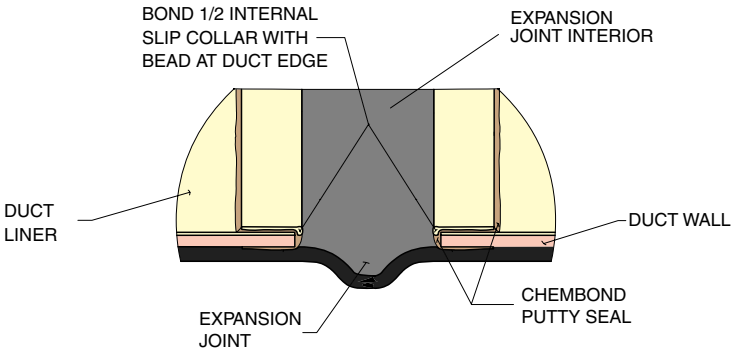

INSIDE SEAL DETAIL
(FOR ARCH AND STRAIGHT SLEEVE STYLES)

Installation Instructions – Expansion Joints

EXPANSION JOINTS					
Comparative Properties of Typical Elastomers					
COMMON NAME	**NEOPRENE**	**HYPALON†**	**VITON†/ FLUOREL****	**EPDM**	**TEFLON* ETFE/FEP/ PTFE**
CHEMICAL GROUP	**chloroprene**	**chloro-sulfonyl-polyethylene**	**fluorocarbon elastomer**	**ethylene-propylene-diene-terpolymer**	**fluoro-ethylene-polymers**
Material Designation					
ANSI/ASTM D1418-77	**CR**	**CSM**	**FKM**	**EPR**	**AFMU**
ASTM D-2000 D1418-77	BC BE	CE	HK	BA CA DA	
Abrasion	Very Good	Good	Very Good	Very Good	Good
Acid, Concentrated	Good	Good	Excellent	Good	Outstanding
Acid, Dilute	Excellent	Excellent	Very Good	Excellent	Outstanding
Aliphatic Hydrocarbons	Fair to Good	Fair to Good	Excellent	Poor	Outstanding
Alkali, Concentrated	Poor	Good	Poor	Excellent	Outstanding
Alkali, Dilute	Good	Good	Good	Excellent	Outstanding
Aromatic Hydrocarbons	Fair	Fair	Excellent	Poor	Outstanding
Chemical	Fair to Good	Excellent	Excellent	Excellent	Outstanding
Cold	Good	Good	Very Good	Very Good	Very Good
Compression Set	Fair	Fair	Excellent	Good	X
Dielectric Strength	Very Good	Very Good	Very Good	Outstanding	X
Dynamic	Fair	Fair	Very Good	Very Good	X
Electrical Insulation	Fair to Good	Fair to Good	Fair to Good	Excellent	X
Flame	Good	Good	Excellent	Poor	X
Heat	Good	Very Good	Excellent	Excellent	Excellent
Impermeability	Good	Good	Very Good	Good	X
Oxidation	Very Good	Excellent	Excellent	Excellent	Excellent
Oxygenated Hydrocarbons	Poor to Fair	Poor to Fair	Poor	Excellent	Outstanding
Ozone	Very Good	Outstanding	Outstanding	Outstanding	Excellent
Rebound - Cold	Good	Fair	Fair	Excellent	X
Rebound - Hot	Very Good	Good	Good	Excellent	X
Sunlight (Ultraviolet Rays)	Very Good	Outstanding	Outstanding	Outstanding	Excellent
Tear	Good	Fair to Good	Fair	Good	X
Tensile Strength	Good	Fair	Very Good	Very Good	X
Water	Good	Very Good	Very Good	Very Good	Outstanding
Water Absorption	Good	Good	Very Good	Excellent	Outstanding
Weather	Excellent	Excellent	Excellent	Excellent	Excellent

x - Consult Manufacturer
*Teflon is a registered trademark of DuPont
**Fluorel is a registered trademark of 3M Companies
†Hypalon and Viton are registered trademarks of DuPont Dow Elastomers
NOTE: The properties or applications shown above are given for general information. The suitability of a material for your application should be evaluated by a qualified engineer.
The above information has been compiled from several expansion joint manufactures' data. We assume no responsibility for errors.

Installation Instructions – Expansion Joints

Fire Dampers–Penetrating Fire Walls With Exhaust Ducts

THE NATIONAL FIRE PROTECTION ASSOCIATION (NFPA) has addressed the issue of fire protection of exhaust ducts penetrating firewalls in specialty manufacturing facilities, such as semiconductor and related facilities, where poisonous gases, severe caustic or concentrated acid fumes are transported through ducts. To protect the occupants in these facilities, it is important that these hazardous fumes are continued to be exhausted in the event of a fire. For example, fire codes stipulate that there must be an auxiliary power source that will operate the exhaust fans at a minimum of 50% of the designed system velocity, in the event the main power source is interrupted from a fire.

NFPA 318 STANDARD for the PROTECTION of CLEANROOMS states the following:

Section 3.3.4: "Exhaust ducts penetrating fire resistance-rated construction shall be contained in an enclosure of equivalent fire-resistive construction. Fire resistance construction and enclosure with equivalent fire resistive construction shall extend 6 ft. (1.97 m) or a distance equivalent to two times the duct diameter, whichever is greater, on either side of the rated construction."

Section 3.3.5: "Fire dampers shall not be installed in exhaust ducts."

Effectively, a 12-foot (3.65 meter) or longer box must be built around the duct, which has the fire resistance of the firewall itself. If a fire occurs on either side of the wall, the duct will be protected and will not be able to collapse, preventing the fire from spreading from one side of the wall to the other. The type of duct does not matter. This same protection concept is desired on metal ducts penetrating fire walls, as well as rated nonmetallic materials which are approved for use without automatic sprinklers. It is recommended that this design concept be reviewed by the "Authority having Jurisdiction" over the specific project.

The "**NFPA 318 Standard for the Protection of Cleanrooms – 2000 Edition**" may be ordered by 1-800-344-3555 if in the USA or by visiting the NFPA on the Internet at **www.nfpa.org/catalog.**

Notes: